WORKSHOP SESSION

CITY COUNCIL

JULY 8, 2008

6:00 P.M.

1. WEST END POST OFFICE – COUNCILMAN BROWN
2. HISTORICAL PRESERVATION ORDINANCE – COUNCILMAN UNGER/MARK AIKINS ESQ.
3. ZONING ORDINANCE – COUNCILMAN UNGER
4. SURF CONTEST – COUNCILMAN UNGER
5. REVIEW OF REGULAR AGENDA

ADMINISTRATIVE AGENDA

CITY COUNCIL

CITY OF LONG BRANCH

JULY 8, 2008

ROLL CALL:

DAVID G. BROWN, COUNCILMAN
ANTHONY GIORDANO, COUNCILMAN
BRIAN UNGER, COUNCILMAN
DR. MARY JANE CELLI, COUNCIL VICE-PRESIDENT
MICHAEL DESTEFANO, COUNCIL PRESIDENT

PLEDGE OF ALLEGIANCE

CERTIFICATION BY CLERK:

I HEREBY CERTIFY THAT THIS MEETING HAS BEEN PUBLISHED IN THE NEWSPAPER IN ACCORDANCE WITH THE OPEN PUBLIC MEETINGS ACT AND POSTED AS REQUIRED BY LAW.

Irene A. Joline, RMC
City Clerk

READING AND APPROVAL OF PREVIOUS MINUTES

JUNE 24, 2008

CONSIDERATION OF ORDINANCES:
PUBLIC HEARING AND FINAL CONSIDERATION: (INTRODUCED JUNE 24, 2008)

#11-08 ORDINANCE AMENDING & SUPPLEMENTING CHAPTER 345 ZONING ARTICLE X 345-94 OF THE CITY OF LONG BRANCH COMBINED LAND USE ORDINANCES TO PROVIDE FOR WAIVER OF DEVELOPER PAYMENT FOR CERTAIN REDEVELOPMENT PROJECTS

#13-08 ORDINANCE AMENDING LONG BRANCH CITY ORDINANCE 116-5 (BEACHES)

#14-08 ORDINANCE REPEALING CHAPTER 325, SUBSECTION 3 PARAGRAPH F AND SCHEDULE IVA (SECTION 325-29) PROHIBITING OF VEHICLES ON PARK AVENUE

#15-08 ORDINANCE AMENDING ORDINANCE 325-29 SCHEDULE IVA, AMENDING ORDINANCE 325-3C AMENDING THE PROVISIONS OF ORDINANCE 11-3.5, 2-95, 325-29, 325-3F (PARKING OCEAN AVENUE NORTH)

ORDINANCES FOR INTRODUCTION: (PUBLIC HEARING SCHEDULED FOR JULY 22, 2008)

#16-08 ORDINANCE VACATING PORTIONS OF NARRAGANSETT AVENUE AND NABERAL AVENUE IN THE CITY OF LONG BRANCH

PUBLIC PARTICIPATION (ALL COMMENTS)

RESOLUTIONS

R218-08 – RESOLUTION AWARDING BID FOR SHOWER TOWERS FOR THE OCEANFRONT

R219-08 RESOLUTION APPROVING 2008/2009 LIQUOR LICENSE RENEWAL OF RO-VA ENTERPRISES, INC.

R220-08 RESOLUTION TO REFUND OVERPAYMENT OF TAXES DUE TO A TAX COURT OF NEW JERSEY JUDGMENT (120 LINCOLN AVENUE, 1169 OCEAN AVENUE, 34 PARK AVENUE, 39 PARK AVENUE, 27 WATERVIEW,

468 OCEAN AVENUE, 444 OCEAN BLVD)

R221-08 RESOLUTION AUTHORIZING CONTRACT FOR LEGAL SERVICES AS LABOR ATTORNEY (APRUZZESE, MCDERMOTT, MASTRO & MURPHY, PC)

R222-08 RESOLUTION AUTHORIZING CONTRACT FOR LEGAL SERVICES AS BOND COUNSEL (JOHN L KRAFT, ESQ.)

R223-08 RESOLUTION AUTHORIZING CONTRACT FOR LOBBYING CONSULTANT SERVICES (PUBLIC STRATEGIES IMPACT, LLC)

R224-08 RESOLUTION AUTHORIZING CONTRACTS FOR LEGAL SERVICES POOL FOR THE CONTRACT YEAR JULY 1, 2008 THROUGH JUNE 30, 2009 (GREENBAUM, ROWE, SMITH & DAVIS, LLC, MCKENNA, DUPONT, HIGGINS & STONE, PC, DIFRANCESCO, BATEMAN, COLEY, YOSPIN, KUNZMAN, DAVIS, LEHRER, PC, MARK R AIKINS, LLC, MAXWELL COLBY, ESQ.)

R225-08 RESOLUTION AUTHORIZING CONTRACTS FOR APPRAISAL SERVICES POOL FOR THE CONTRACT YEAR JULY 1, 2008 THROUGH JUNE 30, 2009 (GAGLIANO APPRAISAL, LLC, MCGUIRE ASSOCIATES, LLC, JOHNSON REALTY SERVICES)

R226-08 RESOLUTION REQUESTING CHANGE IN TITLE, TEXT, OR AMOUNT OF APPROPRIATION PURSUANT TO NJS 40A:4-85

R227-08 RESOLUTION APPROVING VARIOUS LIQUOR LICENSES FOR THE 2008/2009 LICENSING TERM

R228-08 RESOLUTION APPROVAL PAYMENT OF BILLS

R229-08 RESOLUTION OF COUNCIL OF THE CITY OF LONG BRANCH APPOINTING JOHN E BUTOW AS TAX ASSESSOR FOR THE CITY OF LONG BRANCH

APPLICATIONS:

1. APPROVAL OF HONORARY CITY AND STATE ACTIVE MEMBERSHIP FOR LUIS PAULO CRUZ IN THE PHIL DALY HOSE CO. #2
2. APPROVAL OF RAFFLE LICENSE FOR MERIDIAN HEALTH AFFILIATED FOUNDATION

MISCELLANEOUS BUSINESS FOR THE GOOD OF THE ORDER

ADJOURNMENT:

ORDINANCE # 11-08

ORDINANCE AMENDING AND SUPPLEMENTING CHAPTER 345, ZONING, ARTICLE X, §345-94, OF THE CITY OF LONG BRANCH COMBINED LAND USE ORDINANCES TO PROVIDE FOR WAIVER OF DEVELOPER PAYMENT FOR CERTAIN REDEVELOPMENT PROJECTS

WHEREAS, the Oceanfront-Broadway Redevelopment Plan and codifying ordinances (the "Redevelopment Zone Ordinances") provides for various procedures for the identification, selection, and designation of redevelopers; and

WHEREAS, the Redevelopment Zone Ordinances provides that selected redevelopers will enter into redevelopment agreements with the City setting forth various rights and obligations of the selected redeveloper in connection with the specific redevelopment project; and

WHEREAS, §345-94(C) of the Redevelopment Zone Ordinances requires that all selected redevelopers make a non-refundable payment of $50,000 at the time of execution of a redevelopment agreement; and

WHEREAS, the purpose of this payment is to provide funds for economic development programs, including incentives for facade and sign improvements and other business attraction projects, as well as to offset initial expenses incurred by the City in reviewing redevelopment proposals and negotiating redevelopment agreements; and

WHEREAS, the imposition of such payment has been an important mechanism for offsetting City costs and providing funding for economic development programs; and

WHEREAS, the City has entered several redevelopment agreements for substantial projects in various portions of the Redevelopment Area, in which cases such funds were of significant importance to the City; and

WHEREAS, it is anticipated that future redevelopment efforts may begin to increasingly include proposals for smaller scale projects, particularly in the Broadway Sector of the Redevelopment Area, as well proposals for smaller scale projects or improvements by existing property owners; and

WHEREAS, the imposition of a $50,000 payment may, in some cases, be disproportionate to the actual costs incurred by the City in connection with review of proposals and designation of redevelopers for such smaller scale projects and may, in some cases, be too significant a cost relative to the project or improvement proposed; and

WHEREAS, the City desires to encourage such smaller scale projects where feasible and appropriate, consistent with the goals and objectives of the Redevelopment Plan.

NOW, THEREFORE BE IT ORDAINED, by the City Council of the City of Long Branch that §345-94, Article X of Chapter 345 of the City Of Long Branch Combined Land Use Ordinances be amended to include the following new section:

D. The $50,000 payment required pursuant to Section C shall only be required to be paid by redevelopers who enter a redevelopment agreement if the total estimated cost of the project or improvement proposed exceeds $10,000,000. A payment of $25,000 shall be made by a redeveloper upon execution of a redevelopment agreement if the total estimated cost of the project or improvement is between $3,000,000 and $10,000,000. A payment of $10,000 shall be made by a redeveloper upon execution of a redevelopment agreement if the total estimated cost of the project or improvement is less than $3,000,000.

#13-08

ORDINANCE AMENDING LONG BRANCH CITY ORDINANCE 116-5

WHEREAS, existing Ordinance 116-5 Rules and Regulations as to control various activities within the City of Long Branch; and

WHEREAS, it is presently written 116-5J No person shall ride a bicycle or roller blades on the boardwalk or on the beachfront or in the waters adjacent thereto or upon any public walk contained on the beachfront. Which ordinance amended 7-11.95 by Ordinance 26-95; and

WHEREAS, Director William Richards has provided communication to the City Business Administrator under correspondence of June 10, 2008 which correspondence suggests that a redaction from the City Ordinance 116-5J which would eliminate the reference to any of the public walks adjacent thereto; and

WHEREAS, the clear purpose of this revision would be to eliminate any confusion regarding the permissibility of bicycle riding and roller blading on the street or service roadways adjacent to either the boardwalk or promenades; and

WHEREAS, Director Richards indicates that the way the Ordinance is presently constituted, there is no reference to skateboards and it is the belief of the Public Safety Director that the wording of skateboards should be included with the same language and applicability along with bicycles and roller blades; and

WHEREAS, currently the police officers of the City of Long Branch have no authority to prohibit skate boarding on either the boardwalk or promenade. This creates potentially dangerous conditions and potential injury to individuals and/or personal property; as a result of the police offers not having the ability to terminate such skate boarding; and

WHEREAS, the Safety Director also wishes to address the same ambiguity which appears in City Ordinance 116-5I which prohibits dogs and other animals on the boardwalk or on the beachfront or in the waters adjacent thereto; and

WHEREAS, this could arguably include service roadways which the Public Safety Director does not believe was the Council's original intent; and

WHEREAS, said amendments and redactions to the municipal ordinance 116-5J and 116-5I are in the best interest of the City of Long Branch;

ANSELL ZARO
RIMM & AARON
OFESSIONAL CORPORATION
COUNSELLORS AT LAW
0 LAWRENCE AVENUE
CN 7807
OCEAN, NJ 07712
(732) 922-1000

NOW, THEREFORE, BE IT ORDAINED THAT City Ordinance 116-5J be and the same hereby is amended to state: No person shall ride a bicycle, roller blades or use a skate board on the boardwalk/promenade of the City of Long Branch; and

BE IT FURTHER ORDAINED THAT Ordinance 116-5I be amended to state: No dogs or other animals shall be permitted on the boardwalk/promenade or in the waters adjacent thereto; and

BE IT FURTHER ORDAINED THAT the remainder of Ordinance 116-5J and 116-5I shall remain in full force and effect; and

BE IT FURTHER ORDAINED THAT this Ordinance shall take effect immediately upon passage and publication.

INTRODUCED:

ADOPTED:

ANSELL ZARO
RIMM & AARON
OFESSIONAL CORPORATION
OUNSELLORS AT LAW
0 LAWRENCE AVENUE
CN 7807
OCEAN, NJ 07712
(732) 922-1000

Ordinance No. 14-08

ORDINANCE REPEALING CHAPTER 325, SUBSECTION 3, PARAGRAPH F AND SCHEDULE IVA (SECTION 325-29) PROHIBITING OF VEHICLES ON PARK AVENUE

WHEREAS, according to Section 325-3.F., parking is prohibited in the City of Long Branch during certain hours and at certain locations as more fully described in Schedule IVA (Section 325-29); and

WHEREAS, according to Section 325-29, parking is currently prohibited on both sides of Park Avenue from 10:00 a.m. to 6:00 p.m. between the west side of Ocean Avenue and Eaton Avenue; and

WHEREAS, the City of Long Branch has received a recommendation from the City of Long Branch Police Department, Traffic Safety Bureau, that this Ordinance setting forth the above referenced parking prohibition is no longer needed in the City of Long Branch, and therefore, should be eliminated; and

WHEREAS, the City of Long Branch believes that it is in the best interests of the residents of the City of Long Branch that the City accept the recommendations of the Police Department and eliminate the parking restrictions on Park Avenue as more fully set forth in Section 325-29; and

NOW, THEREFORE, BE IT ORDAINED by the Council of the City of Long Branch that Section 325-3.F., which references and incorporates Section 329-29 (Schedule IVA) be and is hereby repealed only as to the parking restriction contained therein on both sides of Park Avenue, between the hours of 10:00 a.m. and 6:00 p.m., between the west side of Ocean Avenue and Eaton Avenue; and

BE IT FURTHER ORDAINED that a copy of this Ordinance, upon adoption, shall be forwarded to the City of Long Branch, Traffic Safety Bureau.

INTRODUCED:

ADOPTED:

ATTEST: CITY OF LONG BRANCH

IRENE JOLINE, CITY CLERK ADAM SCHNEIDER, MAYOR

F:\USERS\Long Branch\Ordinances\Parking Restriction lifted on Park Avenue.doc

#15-08

ORDINANCE AMENDING ORDINANCE 325-29, SCHEDULE IVA; AMENDING ORDINANCE 325-3C, AMENDING THE PROVISIONS OF ORDINANCE 11-3.5, 2-95, 325-29:325-3F

WHEREAS, in accordance with the provisions of City Ordinance 325-3F No person shall park a vehicle between hours specified upon any of the following streets from June 15 to September 15, inclusive:

NAME OF STREET	SIDE	TIME	LOCATION
Ocean Avenue North	Both	8:00 a.m. to 5:00 p.m.	Between Avenel Blvd. and Seaview Avenue

WHEREAS, the intention of the Council of the City of Long Branch is to eliminate all No Parking on both sides of Ocean Avenue North between Avenel Blvd. and Seaview Avenue; and

WHEREAS, in accordance with the provisions of City Ordinance 325-3C No person shall park a vehicle at any time upon any of the following streets or parts of streets:

NAME OF STREET	SIDE	TIME	LOCATION
Ocean Avenue North (formerly New Ocean Avenue)	Both	8:00 a.m. to 5:00 p.m.	Between Seaview Avenue and Avenel Blvd. (formerly Fanchon Avenue)

WHEREAS, the intention of the Council of the City of Long Branch is to allow parking on both sides of Ocean Avenue North between Seaview Avenue and Avenel Blvd. subject to state regulations; and

WHEREAS, in accordance with the provisions of Ordinance 11-3.5, Ordinance 2-95, Ordinance 325-29:325-3F, No person shall park during certain additional hours during additional times of the year:

NAME OF STREET	SIDE	TIME	LOCATION
Ocean Avenue	Both	8:00 a.m. to 5:00 p.m.	Between Avenel Blvd. and Seaview Avenue
Ocean Avenue West	Both	8:00 a.m. to 5:00 p.m. (except for May 30th through September 30th) during which months there shall be no time limit.	Between Joline Avenue and Seaview Avenue

ANSELL ZARO
IMM & AARON
OFESSIONAL CORPORATION
OUNSELLORS AT LAW
0 LAWRENCE AVENUE
CN 7807
OCEAN, N.J. 07712
(732) 922-1000

WHEREAS, it is the intention of the Council of the City of Long Branch to allow parking on both sides of Ocean Avenue between Joline Avenue and Seaview Avenue and between Avenel Blvd. and Seaview Avenue; and

WHEREAS, the Council of the City of Long Branch believes that the street in question is one of the widest streets in the City of Long Branch; and

WHEREAS, said street provides parking for not only neighbors, but also visitors to the beachfront area of the City of Long Branch; and

WHEREAS, there is no safety or traffic problems created by allowing parking on both sides of said streets.

NOW THEREFORE BE IT ORDAINED, by the Council of the City of Long Branch that Ordinance 325-29 schedule IVA (325-29) prohibited certain hours during certain times of the year be amended to vacate all such provisions of said Ordinance which prohibit parking on Ocean Avenue North on the west side from 8:00 a.m. until 5:00 p.m. from Avenel Blvd. extending southerly to Joline Avenue; and

BE IT FURTHER ORDAINED that Ordinance 325-29 schedule IVA (325-3F) intended to vacate the prohibition of parking on Ocean Avenue North, both sides, 8:00 a.m. to 5:00 p.m. between Avenel Blvd. and Seaview Avenue; and

BE IT FURTHER ORDAINED, that the provisions of Ordinance 11-3.5, 2-95, 325-29: 325-F be amended to vacate any prohibition of parking on both sides of Ocean Avenue North between Avenel Blvd and Seaview Avenue and between Joline Avenue and Seaview Avenue at all times of the year; and

BE IT FURTHER ORDAINED, that the entire intent and purpose of this Ordinance Amending said Ordinances shall be to allow parking on both sides of the street during the entire year between Ocean Avenue North, formerly Old Ocean Avenue between Avenel Blvd. and Joline Avenue; and

BE IT FURTHER ORDAINED, that any Ordinances that remain which are contradictory to the terms of this Ordinance shall be of no further force and effect; and

BE IT FURTHER ORDAINED, that the purpose of this Ordinance is to codify all

ANSELL ZARO
IMM & AARON
OFESSIONAL CORPORATION
OUNSELLORS AT LAW
O LAWRENCE AVENUE
CN 7807
OCEAN, NJ 07712
(732) 922-1000

Ordinances which have previously posed no parking restriction on Ocean Avenue North on either side of the street to enable parking to take place on both sides of the street at all times during the year.

INTRODUCED:

ADOPTED:

ATTEST:

CITY OF LONG BRANCH

IRENE JOLINE, CITY CLERK

ADAM SCHNEIDER, MAYOR

ANSELL ZARO
LIMM & AARON
OFESSIONAL CORPORATION
COUNSELLORS AT LAW
0 LAWRENCE AVENUE
CN 7807
OCEAN, NJ 07712
(732) 922-1000

#16-08

ORDINANCE VACATING PORTIONS OF NARRAGANSETT AVENUE AND NABERAL AVENUE IN THE CITY OF LONG BRANCH

WHEREAS, portions of Narragansett Avenue and Naberal Avenue, which are referenced as right-of-ways on the City of Long Branch Tax Map, are no longer required for any public purpose; and

WHEREAS, pursuant to Ordinance 1-88, Ordinance Establishing Policies and Procedures for the Request of Street Vacations in the City of Long Branch, the Clerk of the City of Long Branch has forwarded a request for the proposed vacation to the City Attorney and has also forwarded copies of the request for investigation to the City Engineer, the Planning Department, the Recreation Department and the utility companies, including but not limited to, gas, electric, water, cable and the Long Branch Sewerage Authority; and

WHEREAS, responses have been received by the Clerk from the above who have no objections thereto and/or have responded in the affirmative; and

WHEREAS, the request of each agency has been in accordance with Section 2 of Ordinance 1-88; and

WHEREAS, the City Clerk shall certify costs of public advertising, recording fees and any other sums that become due as a result of the proposed vacation; and

WHEREAS, a metes and bounds description of the portions of Narragansett Avenue and Naberal Avenue to be vacated, is annexed hereto as **Exhibit A**; and

WHEREAS, a survey map describing the portions of Narragansett Avenue and Naberal Avenue to be vacated, is annexed hereto as **Exhibit B.**

WHEREAS, all requirements of Section 4 of Ordinance 1-88 have been met; and

WHEREAS, the City Attorney has certified that the documents referencing the vacation are complete and meet the requirements of Ordinance 1-88; and

WHEREAS, pursuant to Section 5 of Ordinance 1-88, upon said certification and preparation of the within Ordinance, the Mayor and Council are hereby authorized to discuss and introduce said Ordinance and have same published for a public hearing and potential adoption thereafter:

NOW, THEREFORE, BE IT ORDAINED by the Council of the City of Long Branch that a portion of Narragansett Avenue and a portion of Naberal Avenue, as identified in **Exhibit A** annexed hereto, be and is hereby vacated; and

BE IT FURTHER ORDAINED that the survey, annexed hereto as **Exhibit B**, and the metes and bounds descriptions, be forwarded to the City Engineers for their review and comments prior to the public hearing; and

BE IT FURTHER ORDAINED that the Clerk, pursuant to Section 5 of Ordinance 1-88, shall notify by certified mail, return receipt requested, all adjacent and adjoining property owners within 200 feet of the vacated area of the introduction of the Ordinance, and advise them of the date of public hearing, at which time they may attend and make their comments known; and

BE IT FURTHER ORDAINED that upon adoption of the within Ordinance, the City Clerk shall record same with the office of the County Clerk in the County of Monmouth as required by law; and

BE IT FURTHER ORDAINED that upon certification from the office of the County Clerk that the Ordinance has been recorded, the necessary tax records shall be revised by the City Tax Assessor and the vacation shall be indicated on the Tax Map of the City of Long Branch.

INTRODUCED:

ADOPTED:

ATTEST: CITY OF LONG BRANCH

IRENE JOLINE, CITY CLERK ADAM SCHNEIDER, MAYOR

F:\USERS\Long Branch\Ordinances\Vacation of Narragansett and Naberal.doc

EXHIBIT A

Job No. 04-517-00
November 29, 2007

DEED DESCRIPTION

NARRAGANSETT AVENUE

ROAD VACATION

CITY OF LONG BRANCH

MONMOUTH COUNTY, NEW JERSEY

BEGINNING at an iron pin in the westerly sideline of Narragansett Avenue (65 foot Right of Way) where said point intersects the southerly sideline of Lot 4.01, Block 483, as shown on the below-referenced plan and from said beginning point running; thence

1. North 08° 34' 56" West, a distance of 569.55 feet along said westerly sideline to a point; thence
2. North 81° 25' 04" East, a distance of 65.00 feet to an iron pin in the easterly sideline of Narragansett Avenue where said sideline intersects the southerly sideline of Bay Avenue (formerly known as Barr Avenue) (50 foot right of way); thence
3. South 08° 34' 56" East, a distance of 569.55 feet along said easterly sideline to a point; thence
4. South 81° 25' 04" West, a distance of 65.00 feet to the iron pin at the Point and Place of Beginning.

CONTAINS: 37,021 square feet.

The foregoing description was prepared in accordance with a map entitled "BOUNDARY SURVEY, Tax Map, Lots 2, 3, 4 and 5, Block 458, Lots 1, 2, 3, 4, 5 and 6, Block 460, Lots 2 and 3, Block 478, Lots 2, 3, 4, 5, 6 and 8, Block 479, Lot 6, Block 480, Lots 1 and 2, Block 481, Lot 1, Block 482, Lots 1.01, 2.01, 3 and 4.01, Block 483, City of Long Branch, Monmouth County, New Jersey", prepared by D.W. Smith Associates, L.L.C., dated August 29, 2005.

THOMAS J. MURPHY, P.L.S. LIC. #37207

D.W. SMITH ASSOCIATES, L.L.C.
149 YELLOWBROOK ROAD, SUITE 101
FARMINGDALE, NEW JERSEY 07727

BY: EDM
TYPED BY: [illegible]
CHECKED BY: KSM

Job No. 04-517-00
November 29, 2007

DEED DESCRIPTION

NABERAL AVENUE

ROAD VACATION

CITY OF LONG BRANCH

MONMOUTH COUNTY, NEW JERSEY

BEGINNING at a nail set in the northerly sideline of Naberal Avenue (50 foot Right of Way) where said point intersects the westerly sideline of Long Branch Avenue (Right of Way varies), as shown on the below-referenced plan and from said beginning point running; thence

1. South 08° 34' 56" East, a distance of 50.00 feet to an iron pin in the southerly sideline of Naberal Avenue where said point intersects the easterly sideline of Lot 4, Block 458; thence
2. South 81° 25' 04" West along said southerly sideline, a distance of 300.00 feet to a point in the common dividing line of Lot 2 and Lot 1.01, Block 458; thence
3. North 08° 34' 56" West, a distance of 50.00 feet to a point back in the northerly sideline of Naberal Avenue; thence
4. North 81° 25' 04" East, a distance of 300.00 feet along said northerly sideline to the nail set at the Point and Place of Beginning.

CONTAINS: 15,000 square feet.

The foregoing description was prepared in accordance with a map entitled "BOUNDARY SURVEY, Tax Map, Lots 2, 3, 4 and 5, Block 458, Lots 1, 2, 3, 4, 5 and 6, Block 460, Lots 2 and 3, Block 478, Lots 2, 3, 4, 5, 6 and 8, Block 479, Lot 6, Block 480, Lots 1 and 2, Block 481, Lot 1, Block 482, Lots 1.01, 2.01, 3 and 4.01, Block 483, City of Long Branch, Monmouth County, New Jersey", prepared by D.W. Smith Associates, L.L.C., dated August 29, 2005.

Thomas J. Murphy

THOMAS J. MURPHY, P.L.S. LIC. #37207

D.W. SMITH ASSOCIATES, L.L.C.
149 YELLOWBROOK ROAD, SUITE 101
FARMINGDALE, NEW JERSEY 07727

BY: EDJ
TYPED BY: [illegible]
CHECKED BY: KJM

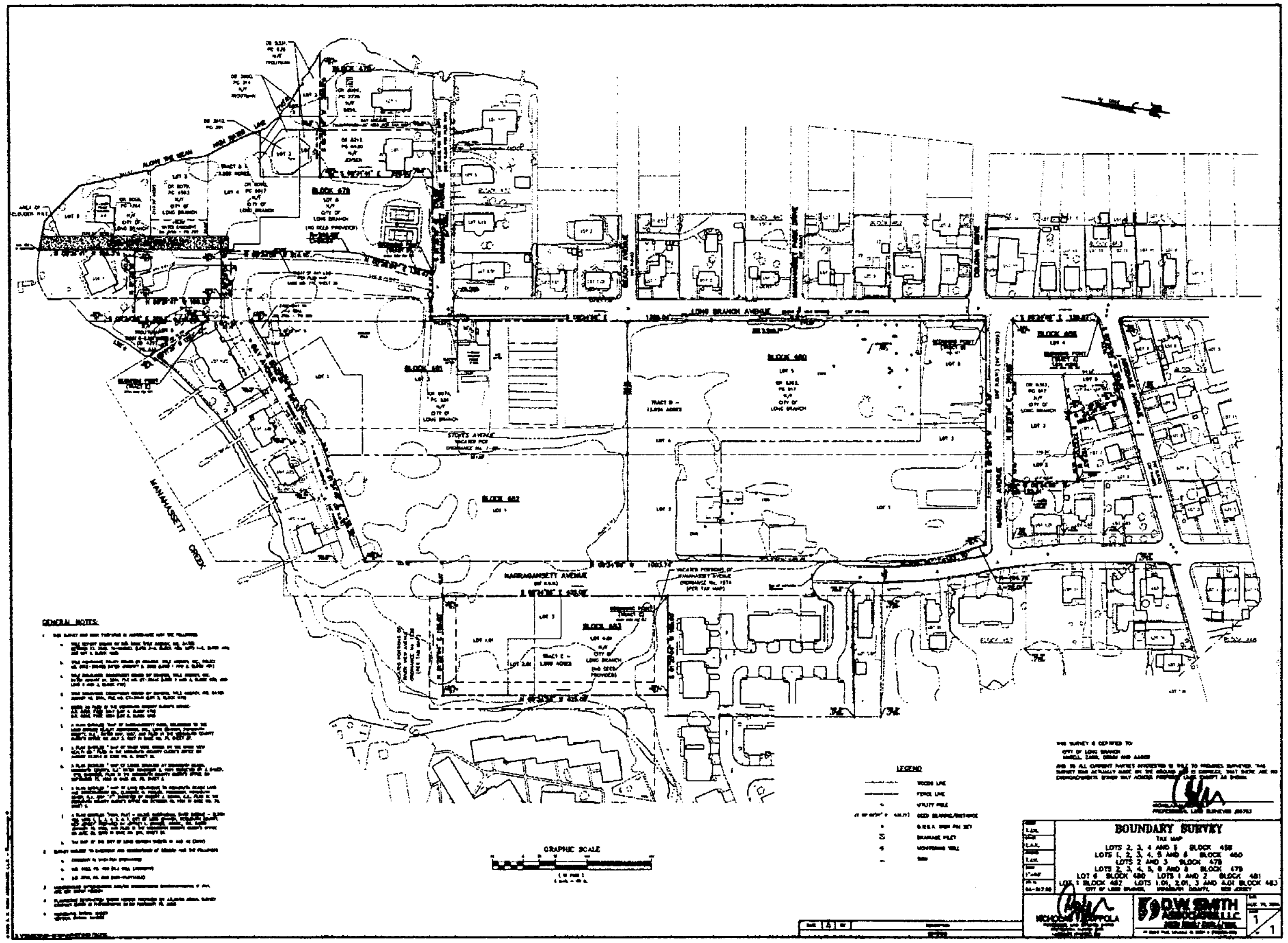

LONG BRANCH AVENUE
NARRAGANSETT AVENUE
MANAHASSETT CREEK
BEACH AVENUE
COLONIA DRIVE
BLOCK 480
BLOCK 482
GENERAL NOTES
LEGEND
GRAPHIC SCALE
BOUNDARY SURVEY
TAX MAP
LOTS 2, 3, 4 AND 5 BLOCK 458
LOTS 1, 2, 3, 4, 5 AND 6 BLOCK 460
LOTS 2 AND 3 BLOCK 478
LOT 6 BLOCK 480 LOTS 1 AND 2 BLOCK 481
NICHOLAS V. COPPOLA
D.W. SMITH
ASSOCIATES L.L.C.

R# 218-08

RESOLUTION AWARDING BID FOR SHOWER TOWERS FOR THE OCEANFRONT

WHEREAS, the City of Long Branch has the need to purchase eight shower towers for installation on its oceanfront beaches by Department of Public Works staff; and

WHEREAS, the City publicly advertised notice of receipt of bids, opened on June 25, 2008, and the following bid was received:

Atlantic Plumbing Supply Corporation **$24,168**

WHEREAS, the bid documents were reviewed by the Purchasing Agent and found to be in order, and it is the recommendation of the Public Works Director that it is in the best interest of the City that a contract for this purchase be awarded to Atlantic Plumbing Supply Corporation; and

WHEREAS, the Chief Financial Officer of the City of Long Branch has certified, in accordance with the Certification of Funds Form attached hereto, that funds are available for this contract in the Capital Budget, Ordinance #06-08, Beachfront Improvements-Shower Towers, Appropriation #C-04-061-641, in the amount of $24,168.

NOW, THEREFORE, BE IT RESOLVED by the City Council of the City of Long Branch, that a contract for purchase of eight shower towers be awarded to **Atlantic Plumbing Supply Corporation**, in accordance with the bid specifications and proposal annexed hereto, **for a sum not to exceed $24,168**.

BE IT FURTHER RESOLVED that the Mayor and Clerk are hereby authorized to execute any and all necessary document pursuant to said award.

CITY OF LONG BRANCH
OFFICE OF THE FINANCE DIRECTOR
344 BROADWAY
LONG BRANCH, NJ 07740

CERTIFICATION OF CHIEF FINANCIAL OFFICER

As the Chief Financial Officer of the City of Long Branch, I certify that funds are available for award of the following contracts/agreements:

PURCHASE OF SHOWER TOWERS FOR THE OCEANFORNT

Said contract being made as follows:

ATLANTIC PLUMBING SUPPLY CORP.	**$24,168**

Said funds being available in the form of:

CAPITAL BUDGET	
ORD. #06-08	
BEACHFRONT IMPROVEMENTS	
SHOWER TOWERS	
APPRO. LINE ITEM #C-04-091-641	**$21,168**

Ronald J. Mehlhorn, Sr., C.P.A., R.M.A.
Finance Director, Chief Financial Officer

Date

CONTRACT

THIS AGREEMENT MADE THIS DAY OF ,

BETWEEN: CITY OF LONG BRANCH
344 Broadway
Long Branch, NJ 07740

a municipal corporation of the State of New Jersey,
hereinafter called the **OWNER**;

AND ATLANTIC PLUMBING SUPPLY CORPORATION
700 JOLINE AVENUE
LONG BRANCH, NJ 07740

hereinafter called the **CONTRACTOR:**

WITNESSETH: That the **OWNER** and the CONTRACTOR for the consideration, hereinafter specified, agree as follows:

ARTICLE ONE: SCOPE OF WORK: CONTRACTOR covenants and agrees to provide a contract for the purchase of eight shower towers in accordance with the bid specifications and proposal herein attached; and

CONTRACTOR further agrees to and perform in a good and workmanlike manner all work required to be furnished and delivered, done and performed in conformity with the Bid Specifications and Contractor's Proposal, annexed hereto and hereby made part of this agreement as fully and with the same effect as if the same had been set forth in the body of this agreement.

ARTICLE TWO: TIME OF DELIVERY AND PERFORMANCE: The **CONTRACTOR** is required to execute a contract within fifteen (15) days after the notice that his proposal has been accepted. Failure or neglect to execute his contract within said period shall constitute a breach of agreement. Said **PERFORMANCE or DELIVERY DATE** shall be in accordance with the provisions of the Contract Documents annexed thereto, and if no time is set forth in the body of this Agreement or in the Contract Documents Annexed thereto, then as directed by the **OWNER.**

ARTICLE THREE: PAYMENT: OWNER agrees to pay **CONTRACTOR** for said work and materials after delivery of any purchase or performance of stated work under the terms of this contract, in accordance with said Contract Documents, and within the time stated for **DELIVERY,** for the actual quantity of authorized work done under each item scheduled in the Proposal, at the respective unit price bid therefore by the

CONTRACTOR, which payment according to the estimated quantities will amount to a sum not to exceed $24,168.00 (twenty four thousand one hundred sixty eight dollars).

Payments to be made in accordance with the OWNER'S requirement for submission of invoices and vouchers and approval by authorized official(s).

Acceptance of the final payment by the **CONTRACTOR** shall be understood to be a release in full of all claims against the **OWNER** arising out of or by reason of the work done and the materials furnished under this contract.

ARTICLE FOUR: INDEMNIFICATION: The **CONTRACTOR** will make all payments of proper charges for said work required in accordance with said Contract Documents, and will indemnify and save harmless the **OWNER**, its officers, agents, or servants and each and everyone of them, against and from all claims, suits, actions, damages and/or costs of every name and description, including royalties, fees or claims for the use of patented methods, or patented rights, or copyrights, and from all damages to which the **OWNER,** or any of its officers, servants or agents, may be subjected or put by reason of injury to person or property of others, or property of the **Owner,** resulting from carelessness in the performance of its work or through the negligence of, or through any act or omission on the part of, the **CONTRACTOR**, its agents or agent, servants, or subcontractors.

ARTICLE FIVE: ASSIGNMENT OR SUBLETTING: CONTRACTOR covenants and agrees not to assign or sublet the work specified or covered under the terms of this agreement without the prior written approval of the **OWNER**.

ARTICLE SIX: AFFIRMATIVE ACTION REQUIREMENTS:
During the performance of this contract, the **CONTRACTOR** agrees to comply with Affirmative Action Regulations, P.L. 1975, c. 127 (N.J.A.C.17:27),
as amended and supplemented from time to time, and, more specifically, as detailed in the section of the bid specifications entitled "Supplement to Information to Bidders, Procurement, Professional and Service Contract, Affirmative Action", and/or Mandatory Affirmative Action Language for Procurement, Professional and Service Contracts, which reads as follows:

The contractor or subcontractor, where applicable will not discriminate against any employee or applicant for employment because of age, race, creed, color, national origin, ancestry, marital status, affectional or sexual orientation, or sex. Except with respect to affectional or sexual orientation, the contractor will take affirmative action to ensure that such applicants are recruited and employed, and that employees are treated during employment, without regard to their age, race, creed color, national origin, ancestry, marital status, affectional or sexual orientation or sex. Such action shall include, but not be limited to the following: employment, upgrading, demotion, or transfer; recruitment or recruitment advertising; layoff or termination; rates of pay or other forms of compensation, and selection for training including apprenticeship. The

contractor agrees to post in conspicuous places, available to employees and applicants for employment, notices to be provided by the Public Agency Compliance Officer, setting forth provisions of this on-discrimination clause.

The contractor or subcontractor, where applicable, will, in all solicitations or advertisements for employees placed by or on behalf of the contractor, state that all qualified applicants will receive consideration for employment without regard to their age, race, creed, color, national origin, ancestry, marital status, affectional or sexual orientation or sex.

The contractor of subcontractor, where applicable, will send to each labor union or representative of workers with which it has a collective bargaining agreement or other contract or understanding, a notice, to be provided by the agency contracting officer, advising the labor union or workers representative of the contractors commitments under this act and shall post copies of the notice in conspicuous places available to employees and applicants for employment.

The contractor or subcontractor, where applicable agrees to comply with any regulations promulgated by the Treasurer pursuant to NJSA 10:5-36 et seq. as amended and supplemented from time to time and the Americans with Disabilities Act.

The contractor or subcontractor agrees to make good faith efforts to employ minority and women workers consistent with the applicable county employment goals established in accordance with NJAC 17:275.2, or a binding determination of the applicable county employment goals determined by the Division, pursuant to NJAC 17:275.2.

The contractor or subcontractor agrees to confirm in writing its appropriate recruitment agencies including but not limited to employment agencies, placement bureaus, colleges, universities, labor unions, that it does not discriminate on the basis of age, creed, color, national origin, ancestry, marital status, affectional or sexual orientation or sex, and that it will discontinue the use of any recruitment agency which engages in director discretionary practices. The contractor or subcontractor agrees to revise any of its testing procedures, if necessary to assure that all personnel testing conforms with the principals of job related testing, as established by the statues and court decisions of the state of new Jersey and as established by applicable federal law and applicable federal court decisions.

In conforming with the applicable employment goals, the contractor, or subcontractor agrees to review all procedures relating to transfer, upgrading, down grading and lay off to ensure that all such actions are taken without regard to age, creed, color, national origin, ancestry, marital status, sex, affectional or sexual orientation, and conform with the applicable employment goals, consistent with the statutes and court decisions of the state of New Jersey, and applicable federal law and applicable Federal court decisions.

The contractor shall submit to the public agency, after notification of award, but prior to execution of a goods and services contract, one of the following three documents:

Letter of Federal Affirmative Action Plan Approval
Certificate of Employee Information Report
Employee information Report Form AA302

The contractor and its subcontract shall furnish such reports or other documents to the Division of Contract Compliance & EEO as maybe requested by the Division from time to time in order to carry out the purposes of these regulations, and public agency shall furnish information as may be requested by the Division of Contract Compliance and EEO for conducting a compliance investigation pursuant to Subchapter 10 of the Administrative Code NJAC17:27.

ARTICLE SEVEN: PERFORMANCE BOND: NOT REQUIRED

ARTICLE EIGHT: LIQUIDATED DAMAGES: NOT APPLICABLE

"The **CONTRACTOR**, is advised that the responsibility to file an annual disclosure statement on political contributions with the New Jersey Election Enforcement commission pursuant to N.J.S.A. 19:44A-20.3 (P.L. 205, c, 271, s.3), if the contractor receives contracts in excess of $50,000 from public Entities in a calendar year. It is the contractor's responsibility to determine if filing is necessary. Additional information on this requirement is available from ELEC at 888-313-3532 or at www.elec.state.nj.us.

This Contract shall be binding upon the **OWNER**, its successors and assigns, and upon the **CONTRACTOR**, its successors and assigns or heirs, executors, administrators and assigns.

IN WITNESS WHEREOF, the **OWNER** has caused this instrument to be signed by **ADAM SCHNEIDER, MAYOR**, attested by **IRENE A. JOLINE, CLERK**, and the Municipal Seal to be hereunto affixed, and **CONTRACTOR** hereunto set their hand and seals, or caused these presents to be signed by their proper corporate officers and their proper corporate seal to be hereto affixed, the day and year first above mentioned.

OWNER: CITY OF LONG BRANCH

Attested by: Date:

_____ _____

Irene A. Joline, City Clerk Adam Schneider, Mayor

CONTRACTOR:

By:_____ Attested by:

_____ _____

Title

Date:_____

CITY OF LONG BRANCH
Notice to Bidders

Notice is hereby given that sealed bids will be received by the Council of the City of Long Branch, New Jersey, for:

#B-2008-10 PURCHASE OF SHOWER TOWERS FOR THE OCEANFRONT

Bids will be opened and read in public by the Purchasing Agent, or her designate, in the City Council Caucus Room, Second Floor, Municipal Building, 344 Broadway, Long Branch, New Jersey, on:

WEDNESDAY, JUNE 25, 2008 AT 2 PM PREVAILING TIME

Specifications will be on file in the Purchasing Office and may be examined by prospective bidders during regular business hours. Bidders may obtain a copy of the bid package by request to the Purchasing Office. Specifications will not be faxed, nor will faxed proposals be accepted.

Proposals must be made on the standard Proposal Form provided, and must be enclosed in a sealed envelope addressed to: City Clerk, City of Long Branch, 344 Broadway, Long Branch, NJ, 07740. The outside of the envelope must be clearly marked with the BID name and number above, and indicate the name and address of the bidder.

Bids must be accompanied by Bid Security in the form of certified check or bid bond, drawn to the order of the City of Long Branch, for not less than ten (10) % of the bid, except that the bid security not exceed $20,000.

Bidders are required to comply with requirements of N.J.S.A. 10:5-31 et seq. and N.J.A.C. 17:27 (Affirmative Action), and with requirements of P.L. 1977, c. 33.

In accordance with P.L. 2004, Chapter 57, bid proposals must be accompanied by a copy of Bidder's valid New Jersey Business Registration Certificate (FORM-BRC) as issued by New Jersey State Department of Treasury, Division of Revenue, or the bid can not be considered.

The City of Long Branch reserves the right to require a complete financial and experience statement from bidders showing they have satisfactorily completed work of a similar nature before awarding the contract. The City also reserves the right to reject any or all bids, or to increase or decrease the quantities as designated in the Specifications.

In the event it is not possible to be present at the time and place of the bid opening, bids may be mailed to the City Clerk, Municipal Building, 344 Broadway, Long Branch, NJ 07740.

Carol A. Mellaci
Purchasing Agent

CITY OF LONG BRANCH
INFORMATION TO BIDDERS

1. Receipt of Bids

Sealed bids will be received by the City Clerk and, at the date, time, and location stated in the Notice to Bidders, shall be publicly opened and read aloud by the Purchasing Agent, or designee.

2. Request for Bid Package

Prospective bidders may obtain a bid package by applying in person to the Purchasing Department, Municipal Building, First Floor, 344 Broadway, Long Branch, during regular business hours, or by requesting the bid package by phone or mail or fax. The City will be responsible for putting the package in the mail but assumes no responsibility for the bidder's receipt of same. The City will not fax bid packages.

3. Form of Proposal

a. No oral, telephone, telegraph or faxed bids, bid documents or bid modifications will be accepted. Bid price must remain firm for sixty (60) days from date of opening.

b. The Bid Proposal shall be enclosed in a sealed envelope, addressed to City of Long Branch, Office of the City Clerk, 344 Broadway, Long Branch, NJ 07740, and bearing, on the face of the envelope, (1) the name and address of the bidder, and (2) clearly marked "BID", with the bid title and/or bid #. The City will not be responsible for bids that are misaddressed and therefore not delivered to the Office of the City Clerk prior to the date and time of the bid opening. Such bids may be considered as late and, therefore, returned unopened.

c. All bids must be submitted on forms prepared by and available from the Purchasing Department. All proposal forms must be filled out and signed in ink or ball point pen by a person authorized to do so. Bid prices must be written in ink or typewritten. Any changes, white-outs, strike-outs, etc. on the proposal page must be initialed in ink by the person responsible for signing the bid.

d. Each bid proposal form must give the full business name and address of the bidder, and must be signed by an authorized representative. Bids by partnerships must furnish the full name of all partners, and must be signed in the partnership name by one of the members of the partnership or by an authorized representative, followed by the signature and designation of the person signing. Bids by corporations must be signed in the legal name of the corporation, followed by the name of the state in which it is incorporated, and must contain the signature and designation of the president, secretary or other person authorized to bind the corporation in the matter. When requested, satisfactory evidence of the authority of the officer signing shall be furnished.

e. The City may consider informal any bid not prepared and submitted in accordance with the provisions hereof, may waive any informalities in the bids, and/or may reject any or all bids if deemed in its best interest.

4. Signature

Bids shall be signed with the full name of the bidder or an authorized agent of the bidder. If the bidder is a corporation, the bid shall be signed by two properly authorized officers of the corporation. The bid shall indicate whether the bidder is an individual, a partnership or a corporation.

In the case of a partnership, the full name of each individual partner shall be given. In case of a corporation, the corporation name with the name of the State under which it is incorporated and the names of its officers shall be given.

5. Withdrawal of Bid

Sealed bids forwarded to the City before the time of the opening of the bids may be withdrawn upon written application of the bidder who shall be required to produce evidence showing that the individual is or represents the principal or principals involved in the bid. Once bids have been opened, they must remain firm for a period of sixty (60) days.

6. Late Bids

It is the bidder's responsibility to see that its bid is presented to the City on the hour and at the place designated in the Notice to Bidders. Bids may be hand delivered or mailed through U.S. Postal Service or private delivery service; however, the City disclaims any responsibility for bids forwarded by regular or overnight mail. If the bid is sent by overnight mail, the designation in Section 2b, above, must also appear on the outside to the delivery company envelope. Bids received after the designated time and date will not be considered, and will be returned to the bidder unopened.

7. Obligation of Bidder

At the time of the opening of the bids, each bidder will be presumed to have read and to be thoroughly familiar with the specifications and all contract documents. The failure or omission of any bidder to receive any form, instrument or document shall in no way relieve any bidder from any obligation in respect to this Proposal.

8. Definition

The terms "bidder", "vendor", and "contractor", as mentioned in these specifications, shall be considered to be synonymous.

9. Quantities

Quantities stated in these specifications are estimates of the City's needs. The City reserves the right to increase or decrease quantities, or to completely eliminate any item or items, depending upon its needs, and based on New Jersey Local Public Contracts Law.

10. Preference for Domestic Products

Pursuant to 40A:11-18 of the revised Statutes of the State of New Jersey, only manufactured products of the United States, wherever available, shall be used in connection with this contract. Bidders intending to claim domestic preference must submit with their bid documentation that the products or goods being provided under this bid are solely made, manufactured, assembled in the United States of America, including detail on the point of origin of the goods and/or all its components. Additionally, the bidder must provide an affidavit certifying that the products or goods are American made or manufactured.

11. Brand Names

Brand names are mentioned for the purpose of setting a standard of comparison. Equivalent brands will be accepted if, upon comparison, they prove to be equal. However, note of substitute brands must be made on the Proposal Form. Otherwise, it will be assumed that the bidder will provide the brand named in the specifications.

12. Delivery Cost and Terms

Unless otherwise stated in these specifications, the bid price(s) provided shall be inclusive of any and all costs for packing, crating, containers, and transportation. All transportation charges shall be fully prepaid by the contractor, with terms F.O.B. destination and placement at locations specified by the City. As specified, placement may require inside deliveries. No additional charges will be allowed for any transportation costs resulting from partial shipments made at the contractor's convenience.

The contractor shall guarantee any or all materials and services supplied under these specifications. Defective or inferior items shall be replaced at the expense of the contractor. In case of rejected materials, the contractor will be responsible for return freight charges.

13. Variations to Specifications

For the purpose of evaluation, the bidder must indicate any variations to the specifications, terms and/or conditions, no matter how slight. If no variations are stated on the Proposal Form, it shall be construed that the bid fully complies with these specifications.

All proposals must be accompanied by product literature, brochures, and additional information as may be necessary to evaluate the product being bid.
Failure to provide this literature may be cause for rejection of the bid.

14. Discrepancies in Bid

In the event there is a discrepancy in figures on the Proposal Form, the written figure, if applicable, shall be considered the correct figure. In the event there is no written figure, the unit price shall be considered correct.

15. Insurance

The contract shall maintain Workmen's Compensation, General Liability, and Automobile Liability insurance coverage in amounts as required in the bid specifications and subject to City approval, and, if requested, shall name the City as also insured.

16. Indemnification

The bidder, if awarded a contact, agrees to protect, defend and save harmless the City, its agents, servants, employees, and assigns against any damage for payment for the use of any patented material process, article or devise that may enter into the manufacture, construction or form a part of the
work covered by either order or contract, and he further agrees to indemnify and save harmless the City, its agents, servants, employees, and assigns from suits or actions of every nature and description brought against it, for, or on account of any injuries or damages received or sustained by any party or parties by, or from any of the acts of the contractor, his servants or agents. This indemnification and save harmless obligation

shall include cost of providing for defense of the City of Long Branch in any type of action filed against the City.

17. Bid Proposal Security

Each bid will be accompanied by either a certified check, cashier's check or bid bond in the amount of ten (10) percent of the bid, unless indicated otherwise in the bid specifications, payable to the City of Long Branch. Such Proposal Security will be returned to the unsuccessful bidders within sixty (60) days after the formal opening of the bids. The Proposal security of the successful bidder will be returned within ten (10) days after the City and the successful bidder have executed a contract for the proposed purchase and performance bond has been provided to the City or, if no contract is executed, within sixty (60) days after the date of the opening of the bids, upon the demand of the bidder at any time thereafter so long as he has not been notified of the acceptance of his bid.
In accordance with New Jersey Statute, failure to submit this security will result in rejection of the bid.

18. Certificate of Surety

Each Proposal must, if indicated on the Bidder's Check List, be accompanied by Certificate of Surety. Said Certificate shall be from bonding company, registered to do business in the State of New Jersey, guaranteeing that it will, upon award of the contract to the bidder, provide a performance bond or 100% of the contract. A sample Certificate of Surety is incorporated into these specifications. **In accordance with New Jersey Statute, failure to provide the Certificate of Surety, if required in the Notice to Bidders, will result in rejection of the bid.**

19. Performance Bond

If indicated as a requirement in the Notice to Bidders, the successful bidder will be required to provide, simultaneously with the delivery of the executed contract, an executed Performance Bond, in the amount of one hundred percent (100%) of the acceptable bid, as security for the faithful performance of this contract.
Failure to deliver this bond with the executed contract shall be cause for declaring the contract null and void.

20. Public Disclosure

Chapter 33 of the Public Laws of 1977 provides that no corporation or partnership shall be awarded any State, Municipal or School District contract for performance of any work or the furnishing of any materials or supplies, unless prior to the receipt of the bid or accompanying the bid of said corporation or partnership there is submitted a statement. The statement shall set forth the names and addresses of all stockholders in the corporation or partnership who
own ten percent or more of its stock of any class, or of all individual partners in the partnership who own a ten percent or greater interest therein. **In accordance with New Jersey Statute, failure to supply this information with your proposal will result in rejection of the bid.**

21. Non-Collusion Affidavit

The bidder must submit with his proposal the attached affidavit of non-collusion, which must be signed and notarized. **Failure to include this executed form with your bid proposal will result in rejection of the bid.**

22. Acknowledgement of Receipt of Addenda

Any necessary addenda to these specifications will be delivered to all prospective bidders by fax and/or mail within the timeframe allowable by law.
Bidders must complete Acknowledge of Receipt of Addenda form provided in the bid package. **In accordance with New Jersey Statute, failure to include this executed form with your bid proposal will result in rejection of the bid.**

23. Business Registration

In accordance with P.L. 2004, Chapter 57, all bidders submitting a bid to the City must include, with their bid submission, proof of registration of their business with State of New Jersey, Department of Treasury, Division of Revenue, in the form of a copy of the bidder's valid Business Registration Certificate (see sample form in specification package). Regardless of whether the City may have on file a copy of this form, **in accordance with New Jersey Statute, failure to include your Business Registration Certificate with your bid proposal will result in mandatory rejection of the bid.**

Further, the successful bidder must review and comply with the mandatory language in the attachment entitled Business Registration Certificate Compliance incorporated into these bid specifications. This language will become part of the contract document upon award of the bid.

24. Public Works Contractor's Registration

In accordance with N.J.S.A. 34:11-56.48 et seq., all contractor's bidding on contracts for "public works", and listed subcontractors, in addition to compliance with Prevailing Wage Regulations, must have, at the time of the receipt and opening of bids, a valid Public Works Contractor's Registration, issued by New Jersey Department of Labor, Division of Wage and Hour Compliance, Contractor Registration Section. Bids submitted by unregistered contractors can not be considered. The City requests copy of said registration(s) with the submission of the bid, if possible. The contract will not be awarded until certificates are received from the contractor, and verified with the State for validity.

25. Prevailing Wages

The successful bidder must comply with provisions of State Labor Laws, and New Jersey Prevailing Wage Act (34:11-56.26 et. seq.), and, if applicable, must submit certified payrolls in form set forth in N.J.A.C. 12:60-6.1(c).

Construction projects funded through Federal government funding must comply with the Federal Davis Bacon Prevailing Wage Act (29CFR, Parts 1, 3, 5), and the provisions of Federal Labor Laws.

26. Americans with Disabilities Act of 1990

Discrimination on the basis of disability in contracting for the purchase of goods and services is prohibited. The successful bidder is required to read the Americans with Disabilities language that is part of this specification, and agrees that the provisions of Title II of the Act are made a part of the contract. The successful bidder is obligated to comply with the act and to hold the City harmless.

27. Affirmative Action Requirements

The bidder must read, make himself familiar with, and agree to comply with the requirements of N.J.S.A. 10:5-27 et seq., and N.J.A.C. 17:27. Specifically, the successful with have to comply with the Mandatory Equal Employment Opportunity Language, Exhibit A, which will become a part of the contract documents. Further the bidder must complete the Affirmative Action Questionnaire incorporated into this bid package.

28. Acceptance of Bid and Its Effect

Within sixty (60) days after the opening of the bids, the City will act upon them. The acceptance of a bid will be given to the successful bidder by formal written notice of action taken by the Long Branch City Council. No other act of the City or any official shall constitute the acceptance of a bid. The acceptance of a bid shall bind the successful bidder to execute the contract and to be responsible for liquidated damages as hereinafter provided. The rights and obligations provided for in the contract shall become effective and binding upon the parties only with its formal execution of agreement of contract. Acceptance of a bid as provided herein, shall constitute the award of the contract.

29. Bidder's Hearing

In the event that a bid is to be rejected, the bidder will be notified of the proposed action in writing by the Purchasing Agent, and afforded the right to a Hearing before the City's Hearing Officer. The Hearing Officer will make a recommendation to Council based upon the information gathered at the Hearing. Should the bidder fail to request a hearing, he will be barred from challenging the award of the bid.

30. Award of Bid

Award of this bid is subject to availability of funds. The City reserves the right to award the bid on a line item or lump sum basis, or to reject all bids, if deemed in its best interest. In the event of equal or tie bids, the City reserves the right to award, at its discretion, to any one of the tie bidders.

31. Time for Executing the Contract

The bidder whose bid shall be accepted will be required to execute a contract within fifteen (15) days after the notice that his Proposal has been accepted.
Failure or neglect to execute the Contract within the said period shall constitute a breach of the agreement effected by the acceptance of the bid and the Proposal security shall thereupon become forfeited. The provisions contained in the said contract shall be considered a part of the Specifications.

32. Liquidated Damages for Failure to Enter Into Contract

The successful bidder, upon his failure or refusal to execute and deliver the Contract and Bonds required within fifteen (15) days after he has received notice of acceptance of his bid, shall forfeit to the City as liquidated damages for such failure or refusal, the proposal security deposited with his bid.

33. Assignment or Subletting of Contract

The contractor may not assign or sublet this contract, in whole or in part, without prior express written approval of the City Business Administrator.

34. Tax Exemption

The City of Long Branch is exempt from all Federal and State excise, sales, and other taxes. Tax ID number is available upon request to the Comptroller's Office.

35. Contract Forms

Incorporated into this bid package is a sample of the City's standard contract form. All prospective bidders should familiarize themselves with this form in the event they are awarded the bid.

36. Time of Payment

The City shall make payment for all goods and/or services provided under this bid within forty-five (45) days after delivery of any purchase, upon request to the Finance Department for payment in the form of signed voucher and a detailed invoice.

37. Payment Requests-Construction Contracts

Pursuant to N.J.S.A. 2A:30A-1 et seq., better known as the "Prompt Payment Law", all contractors for "Public Works" projects, are required to follow the following procedures in submitting bills, invoices, and/or requests for payment:

a. In order for payment to be made in a timely manner, any bill, invoice and/or request for payment must be received by the City, or its agent, no later than thirty (30) calendar days prior to the Council Meeting in which you are requesting payment be approved and made. If a Contractor is unable to make a payment request in this time frame, said payment (if approved) will be made at the next regularly scheduled public meeting of the Long Branch City Council. Council Meetings are scheduled for the second and fourth Tuesday of each month (holidays excepted).

b. In the event that a regularly scheduled meeting of the Council is cancelled due to severe weather, lack of quorum, emergency, and/or any other reason, all requested payments will be postponed until the subsequent meeting of the City Council.

c. From the date that the payment request is received, the City will have twenty (20) calendar days to approve, deny, or partially withhold payments. If the request is **approved**, payment will be made in accordance with the Council Meeting schedule above. If the request is **denied or partially withheld**, the City, or its Project Consultant, will immediately notify the Contractor in writing of the reason for the denial. Payment will not be made until all errors or omissions have been corrected to the satisfaction of the City.

d. Unless otherwise indicated at the pre-construction meeting, all requests for payment must be presented to the City's Project Consultant (engineer, architect, or other professional designated by the City to perform project oversight). That Consultant will be responsible for reviewing the payment request and either approving same and forwarding to the City Comptroller for payment processing, or denying the payment and notifying the Contractor, in writing, of the deficiencies. City Comptroller must be copied on all correspondence relating to payments.

e. If the Contractor's payment request for payment is approved, but the Comptroller's Office has not received the required Prevailing Wage Documentation, either prior to or with the payment request, payment request will be denied as incomplete and the Contractor notified in writing of the deficiency.

Processing will not be completed until the deficiency is corrected as required by law, and until the next regularly scheduled Council Meeting.

f. In utilizing a Consultant for administration of a municipal project, said Consultant agrees to be held to the same payment processing requirements under the "Prompt Payment Law" as the City. The Consultant acknowledges that it has read and is familiar with this law, and with the provisions of Section 37 of these bid specifications. Any penalties assessed to the City as a result of the Consultant not abiding by the specification procedure or the law shall be deducted from their total contract amount due. The Consultant further agrees to indemnify and hold the City harmless from all consequences of their having not processed requests for payment in a timely manner pursuant to the law or these specification requirements.

38. Material Safety Data Sheets

In accordance with Workers and Community Right to Know Act (N.J.S.A. 34:5a-1 et seq) the State Department of Health has adopted a Workplace Hazardous Substance List (N.J.A.C. 8:59-9), which includes 2051 substances that pose a threat to the health and safety of employees. Therefore, under the provisions of N.J.A.C. 8:59-7, each bidder must furnish the City of Long Branch with a MSDS (Material Safety Data Sheet) for each product they supply to the City which contains a substance listed on the Hazardous Substance List (N.J.A.C. 8:59-9). These MSDS must be submitted to the City of Long Branch
upon award of bid and signing of the contract documents. The City of Long Branch reserves the right to request a copy of the applicable MSDS be forwarded to the appropriate department with the delivery of each product.
Furthermore, under the provisions of N.J.A.C. 8:59-9, each product shall have a label affixed or stenciled onto any container that contains such substances and is going to be supplied to the City.

39. Non-Appropriation of Funds

In accordance with New Jersey Statutes, multi-year contracts, and contracts whose term encompasses more than one fiscal year, are awarded based upon certification of adequate funds in the current budget year, with continuation of the contract contingent upon provision of additional funds in future year budgets.

If, in fact, due to budget constraints, the City determines that it cannot continue the contract beyond the period for which funds were certified, it will give
the contractor sixty (60) days written notice of its intent to cancel the contract.

40. Disclosure of Contributions to ELEC

Contractors are advised of the responsibility to file an annual disclosure statement on political contributions with the New Jersey Election Enforcement Commission, pursuant to N.J.S.A. 19:44-20.13 (P.L. 2005, c, 271, s.3), if the contractor receives contracts in excess of $50,000 in the aggregate from public entities in a calendar year. It is the contractor's responsibility to determine if filing is necessary. The report is due September 28, 2007 for the 2006 calendar year, and March 30 of each subsequent year for reporting for prior year contracts. Additional information on this requirement is available from ELEC at 888-313-3532 or at www.elec.state.nj.us.

EXHIBIT A
MANDATORY EQUAL EMPLOYMENT OPPORTUNITY LANGUAGE
N.J.S.A. 10:5-31 et seq. (P.L. 1975, C. 127)N.J.A.C. 17:27

GOODS, PROFESSIONAL SERVICE AND GENERAL SERVICE CONTRACTS

During the performance of this contract, the contractor agrees as follows:

The contractor or subcontractor, where applicable, will not discriminate against any employee or applicant for employment because of age, race, creed, color, national origin, ancestry, marital status, affectional or sexual orientation, gender identity or expression, disability nationality or sex. Except with respect to affectional or sexual orientation and gender identity or expression, the contractor will take affirmative action to ensure that such applicants are recruited and employed, and that employees are treated during employment, without regard to their age, race, creed, color, national origin, ancestry, marital status, affectional or sexual orientation, gender identity or expression, disability, nationality or sex. Such action shall include, but not be limited to the following: employment, upgrading, demotion, or transfer; recruitment or recruitment advertising; layoff or termination; rates of pay or other forms of compensation; and selection for training, including apprenticeship. The contractor agrees to post in conspicuous places, available to employees and applicants for employment, notices to be provided by the Public Agency Compliance Officer setting forth provisions of this nondiscrimination clause.

The contractor or subcontractor, where applicable will, in all solicitations or advertisements for employees placed by or on behalf of the contractor, state that all qualified applicants will receive consideration for employment without regard to age, race, creed, color, national origin, ancestry, marital status, affectional or sexual orientation, gender identity or expression, disability, nationality or sex.

The contractor or subcontractor, where applicable, will send to each labor union or representative or workers with which it has a collective bargaining agreement or other contract or understanding, a notice, to be provided by the agency contracting officer advising the labor union or workers' representative of the contractor's commitments under this act and shall post copies of the notice in conspicuous places available to employees and applicants for employment.

The contractor or subcontractor, where applicable, agrees to comply with any regulations promulgated by the Treasurer pursuant to N.J.S.A. 10:5-31 et seq., as amended and supplemented from time to time and the Americans with Disabilities Act.

The contractor or subcontractor agrees to make good faith efforts to employ minority and women workers consistent with the applicable county employment goals established in accordance with N.J.A.C. 17:27-5.2, or a binding determination of the applicable county employment goals determined by the Division, pursuant to N.J.A.C. 17:27-5.2.

The contractor or subcontractor agrees to inform in writing its appropriate recruitment agencies including, but not limited to, employment agencies, placement bureaus, colleges, universities, labor unions, that it does not discriminate on the basis of age, creed, color, national origin, ancestry, marital status, affectional or sexual orientation, gender identity or expression, disability, nationality or sex, and that it will discontinue the use of any recruitment agency which engages in direct or indirect discriminatory practices.

The contractor or subcontractor agrees to revise any of its testing procedures, if necessary, to assure that all personnel testing conforms with the principles of job-related testing, as established by the statutes and court decisions of the State of New Jersey and as established by applicable Federal law and applicable federal court decisions.

In conforming with the applicable employment goals, the contractor or subcontractor agrees to review all procedures relating to transfer, upgrading, downgrading and layoff to ensure that all such actions are taken without regard to age, creed, color, national origin, ancestry, marital status, affectional or sexual orientation, gender identity or expression, disability, nationality or sex, consistent with the statutes and court decisions of the State of New Jersey, and applicable Federal law and applicable Federal court decisions.

The contractor shall submit to the public agency, after notification of award but prior to execution of a goods and services contract, one of the following three documents:

Letter of Federal Affirmative Action Plan Approval
Certificate of Employee Information Report
Employee Information Report Form AA302

The contractor and its subcontractors shall furnish such reports or other documents to the Div. of Contract Compliances & EEO as may be requested by the office from time to time in order to carry out the purposes of these regulations, and public agencies shall furnish such information as may be requested by the Div. of Contract Compliance & EEO for conducting a compliance investigation pursuant to **Subchapter 10 of the Administrative Code at N.J.A.C. 17:27.**

AMERICANS WITH DISABILITIES ACT OF 1990

Equal Opportunity for Individuals with Disability

The CONTRACTOR and the OWNER do hereby agree that the provisions of Title II of the American With Disabilities Act of 1990 (the "ACT") (42 U.S.C. S12101 et seq.), which prohibits discrimination on the basis of disability by public entities in all services, programs, and activities provided or made available by public entities, and the rules and regulations promulgated pursuant thereunto, are made a part of this contract. In providing any aid, benefit, or service on behalf of the OWNER pursuant to this contract, the CONTRACTOR agrees that the performance shall be in strict compliance with the Act. In the event that the Contractor, its agents, servants, employees, or subcontractors violate or are alleged to have violated the Act during the performance of this contract, the CONTRACTOR shall defend the OWNER in any action or administrative proceeding commenced pursuant to this Act. The Contractor shall indemnify, protect, and save harmless the OWNER, its agents, servants, and employees from and against any and all suits, claims, losses, demands, or damages, of whatever kind or nature arising out of or claimed to arise out of the alleged violation. The CONTRACTOR shall, at its own expense, appear, defend, and pay any and all charges for legal services and any and all costs and other expenses arising from such action or administrative proceeding or incurred in connection therewith. In any and all complaints brought pursuant to the OWNER grievance procedure, the CONTRACTOR agrees to abide by any decision of the OWNER which is rendered pursuant to said grievance procedure. If any action or administrative proceeding results in an award of damages against the OWNER or if the OWNER incurs any expense to cure a violation of the ADA which has been brought pursuant to its grievance procedure, the CONTRACTOR shall satisfy and discharge the same at its own expense.

The OWNER shall, as soon as practicable after a claim has been made against it, give written notice thereof to the CONTRACTOR along with full and complete particulars of the claim. If any action or administrative proceedings is brought against the OWNER or any of its agents, servants, and employees, the OWNER shall expeditiously forward or have forwarded to the CONTRACTOR every demand, complaint, notice, summons, pleading, or other process received by the OWNER or its representatives.

It is expressly agreed and understood that any approval by the OWNER of the services provided by the CONTRACTOR pursuant to this contract will not relieve the CONTRACTOR of the obligation to comply with the Act and to defend, indemnify, protect, and save harmless the OWNER pursuant to this paragraph.

It is further agreed and understood that the OWNER assumes no obligation to indemnify or save harmless the CONTRACTOR, its agents, servants, employees and subcontractors for any claim which may arise out of their performance of this Agreement. Furthermore, the CONTRACTOR expressly understands and agrees that the provisions of this indemnification clause shall in no way limit the CONTRACTOR'S obligations assumed in this Agreement, nor shall they be construed to relieve the CONTRACTOR from any liability, nor preclude the OWNER from taking any other actions available to it under any other provisions of the Agreement or otherwise at law.

Registering A Business with the New Jersey Department of the Treasury

Business organizations or individuals doing business in New Jersey are required to register with the Department of the Treasury, Division of Revenue. Registration is free and is a one-time action – there are no fees to register. However, you should update your contact and tax eligibility information as needed. Registration is required to conduct most business with any state, county, municipal, local board of education, charter school, county college, authority, or state college or university. The contracting agency may be required to have a copy of the "proof of registration certificate" submitted as part of a public bid or prior to issuing a purchase order.

To register: Businesses must complete **Form NJ-REG** and submit it to the Division of Revenue. The form can be filed form online or by mailing a paper form to the Division. Online filing is strongly encouraged.

- Register online at www.nj.gov/treasury/revenue/taxreg.htm. Click the "online" link and then select "Register for Tax and Employer Purposes."
- Download the paper form and instructions at www.nj.gov/treasury/revenue/revprnt.htm.
- Call the Division at 609-292-1730 to have a form mailed to you.
- Write to the Division at: Client Registration Bureau, PO Box 252, Trenton, NJ 08646-0252.

Note: If you operate a corporation, limited partnership, limited liability company or limited liability partnership, before registering, you must obtain legal authority to operate in the State of New Jersey. Generally, this is accomplished by filing an original business certificate with the Division of Revenue, such as a Certificate of Incorporation or Formation. For more information on this subject, visit www.nj.gov/treasury/revenue/filecerts.htm, or call 609-292-9292.

Registering as an individual: There is a simplified registration process for individuals doing business with any New Jersey government agency. The form (NJ-REG-A) may be on the back of this form. If not, it can be downloaded from the web at www.nj.gov/treasury/revenue/pdforms/rega.pdf. To obtain a copy by mail, call 609-292-1730, or write to the Division at the Client Registration Bureau, PO Box 252, Trenton, NJ 08646-0252.

Questions about the registration process? Call 609-292-1730 or submit by e-mail at www.nj.gov/treasury/revenue/revcontact.html.

How do I receive the proof of registration certificate?

- New registrants. When completing Form NJ-REG, make sure you answer "Yes" to the contractor/sub-contractor question (Online - Item 17; Paper Form - Item 18). The Division of Revenue will mail the certificate to the mailing address you supply on your registration form.
- Previously Registered Businesses. Call 609-292-1730 and select option 3. The Division of Revenue's service agents will take your order and mail you a certificate. Please allow 7 to 10 working days to receive your certificate. Alternately, you may visit the Division's Client Registration Bureau in person and request a certificate. The address is 847 Roebling Avenue, Trenton, NJ 08611. Service desk hours are 8:30am to 4pm, weekdays, excluding holidays.

What information does the proof of registration contain? The certificate displays the following information: Business Name, Trade Name (If Applicable), Tax Payer ID (Usually the Employer Identification Number), Business Address, Contractor Certification Number (State Issued), Certification Issuance Date, Effective Date (Business Start Date Entered on Form NJ-REG).

STATE OF NEW JERSEY
BUSINESS REGISTRATION CERTIFICATE
FOR STATE AGENCY AND CASINO SERVICE CONTRACTORS

DEPARTMENT OF TREASURY
DIVISION OF REVENUE
PO BOX 252
TRENTON NJ 08646-0252

TAXPAYER NAME:
TAX REGISTRATION TEST ACCOUNT

TRADE NAME:
CLIENT REGISTRATION

TAXPAYER IDENTIFICATION#:
970-097-382/500

SEQUENCE NUMBER:
0107340

ADDRESS:
847 ROEBLING AVE
TRENTON NJ 08611

ISSUANCE DATE:
07/14/04

EFFECTIVE DATE:
01/05/04

Acting Director

FORM-BRC(08-01)

This Certificate is NOT assignable or transferable. It must be conspicuously displayed at above address.

STATE OF NEW JERSEY
BUSINESS REGISTRATION CERTIFICATE

Taxpayer Name: TAX REG TEST ACCOUNT

Trade Name:

Address: 847 ROEBLING AVE
TRENTON, NJ 08611

Certificate Number: 1093907

Date of Issuance: October 14, 2004

For Office Use Only:

20041014112823533

CITY OF LONG BRANCH
BID SPECIFICATIONS
Shower Towers for the Oceanfront

INTENT

It is the intent of these bid specifications to describe and govern the purchase of outdoor shower towers to be installed by the Public Works Department staff on the City's oceanfront beaches.

The shower towers described in these specifications are manufactured by Shower Tower, Inc. of Sanford, Florida. The City has used this manufacturer's shower tower to describe a standard of design and quality in these specification because it incorporates into the design certain desirable characteristics, such as vandal resistance, ease of maintenance and installation, and tolerance of extreme outdoor weather elements. Other manufacturer's brands will be considered if they meet or exceed the standards defined in these specifications. See the paragraph below entitled "Exceptions" for more detail on substituted brands.

Bids will be considered from the manufacturer of the shower tower, and/or from manufacturer's authorized representatives or dealers. Manufacturer of the equipment being bid must have been in the business of manufacturing shower towers of similar design and use for a minimum of five years.

SCOPE

The City plans to order a quantity of eight (8) four station outdoor shower towers as further described in the specifications below. The bid price is to include any and all delivery costs. The City reserves the right to increase or decrease the number of units it orders, at the unit price in this bid, as deemed in its best interest and as allowed by law.

GENERAL

The City of Long Branch is not responsible for any misinterpretation or misunderstanding of these specifications by the bidder, or any errors in publication, or print of any corrections. The bidder cannot assume anything pertaining to the specifications or the equipment they intend to offer. Prospective bidders are advised to read these entire specifications promptly upon receipt, and to immediately thereafter direct any questions regarding the bid to the Purchasing Office. (See paragraph under Errors and Omissions).

ERRORS AND OMISSIONS

Inadvertent omissions and/or errors that may require change to these specifications must be submitted to the City Purchasing Agent in writing at least seven days prior to the bid opening date in order to comply with statutes relative to advertisement of addenda. All questions shall be answered by written addendum to all prospective bidders. Verbal responses shall not be binding.

Following award of the bid, should the successful bidder discover any errors or omissions in the work undertaken and executed by him, he shall immediately notify the Purchasing Agent, who shall promptly verify same. If, with the knowledge of such error or omission, and, prior to the correction thereof, the bidder proceeds with any work affected thereby, he shall do so at his own risk. The work done shall not be considered as work done under, and in the performance of this agreement unless, and until, approved and accepted in writing by the Purchasing Agent.

It is the responsibility of the successful bidder to deliver to the City equipment as described in the specifications and/or bid proposal, and as ordered by the City.

EXCEPTIONS

Mention of brand names in these specifications is for the purpose of setting a minimum standard of quality. Other brands will be considered if, upon analysis by the City, they prove to be of equal quality. However, note of substitute brands must be included in the exception information included by the bidder. Any mention of brand names shall be assumed to mean "or equal" whether or not words "or equal" actually follow the brand name.

These specifications are not intended to be restrictive, but are meant to describe the type of unit required for use by the City of Long Branch. Bidders are warned, however, that failure to carry out the provisions noted herein will be deemed sufficient reason to reject their bid.

Any and all exceptions to or deviations from these specifications, no matter how slight or minor, must be detailed on a separate page accompanying the bidder's proposal. The exceptions must be noted in detail in the same order as the bid specifications, and must include the section and item number, if applicable. The bidder must explain exactly how and why the substitute being offered is equal to or better than that in the bid specifications.

It is not acceptable to take an exception to an entire section; each item in that section must be noted. If the bidder lists no exceptions, the City will assume that the equipment provided will be exactly like that described in these specifications.

Accompanying the bidder's proposal must be adequate product literature, pictures, manufacturer's design drawings, blueprints, and technical specifications to enable the City to evaluate the equipment being offered by the bidder. Failure to provide the required information shall be cause for rejection of the bid.

The model unit delivered to the City must be the exact model bid by the bidder. The City reserves the right to reject delivery of the unit if it does not comply with the specifications outlined in the bid proposal.

DELIVERY

The bid price must be inclusive of any charges for delivery of the completed units to the City. Delivery terms shall be FOB Long Branch Public Works Department. The bidder must notify the Public Works Director forty-eight hours prior to the scheduled date of delivery. Phone - 732.904.4741 or 732.904.4743.

Bidder must indicate on the Proposal Form the number of calendar days from date of notice of award in which delivery will be completed for the shower towers ordered.

WARRANTY

The unit delivered must be unconditionally guaranteed to be free from defects in materials, design and workmanship as follows:
The towers must be guaranteed for a period of not less than five (5) years.
The plumbing fixtures must be guaranteed for the life of the units.

REFERENCES

Bidder shall provide a list of at lease five (5) customers, including phone number and contact name, using the shower towers on oceanfront beaches.

TECHNICAL DETAILS

Shower Column Information

- Constructed of high-grade polymer. Tough, non-porous plastic won't rust or corrode.
- Periodic cleaning maintains a brand new look for many years.
- Multi-layered construction consists of a polymer plumbing sleeve, approximately 9" inside diameter, is inserted inside the molded, colored exterior shell with a foam filler injected between the two pieces.
- Dimensions as diagramed on following page.
- Flat plumbing fixture panels, hexagonal in shape, occur at 26" height for foot wash and hose bib placement, 50" height for control valve placement, and near the top at 73" height for shower nozzle placement. (Manufacturer shall also offer, at no additional cost, control valve placement at
  ADA compliant 48" height as an option.)
- Round portions of the column are rough textured to discourage carving and engraving.
- Anchor hole areas are recessed below the top of the mounting flange to help keep mounting hardware away from bare feet.
- Impact resistant to minus 40 degrees F.
- UV stabilized, molded in colors that won't fade.
- Colors molded through the entire shell. Nicks and scratches won't show when they occur. Undesirable cuts, engraving, etc., can be heat blended away with careful use of butane torch.
- To remove mineral deposits, calcium buildup, dirt, etc., use Limeaway or other household cleaners with a non-abrasive brush or pad. Life of tower can be extended and kept sparkling by periodically applying a non-petroleum based oil such as lemon oil.

Plumbing Fixtures

Control valves are Symmons Industries "Shower-off" valves. Brass and chrome-plated brass components with push button operation. Adjustable run times from approximately 20 to 90 seconds.

- One temperature operation. Tempered water must be mixed prior to supply line feed.
- Easy maintenance. Contains few moving parts.
- Stainless steel, vandal resistant fasteners.
- Stops on each valve to allow service to individual "stations without shutting down the entire facility.
- Parts available through manufacturer or local plumbing wholesaler.
- Plumbing must be "winterized" in cold climates to avoid freeze damage. Remove push button cartridges, drain, or treat like any outdoor plumbing that requires protection.
- See Maintenance/Service & Repair/Parts page for service and maintenance procedures and parts.

Shower and Foot wash nozzles are Bradley Corp. severe service, heavy duty fixtures mounted on the flat panels at the top and bottom of the tower. Shower nozzles are set at 73" and foot-washes at 26". For special configurations, a shower nozzle can be set at a 50" height.

- Chrome plated brass construction.
- Recessed nozzles leave little to grab onto, making them vandal resistant.
- Adjustable spray pattern, from fine mist to jet spray, is achieved with a 1/8" Allen screw in nozzle tip.
- Stainless steel, Allen head fasteners.
- 2.5 gallon per minute maximum flow per nozzle.

Plumbing manifold is constructed of brass fittings and 5/8" braided, high pressure hose.

- 5/8" flair fittings connect manifold to control valves.
- ¾" female hose thread fitting at connection point to the supply line.

Customer water supply should be stubbed up anywhere from 4" – 12" above the mounting pad, with a ¾" male hose thread fitting. Line should supply a minimum of 20 GPM @ 40 PSI.

Customization of Shower Tower

Each Shower Tower is built to order. The towers are outfitted with one to six user stations. A station is a control valve and a shower nozzle or a control valve and a foot wash located on one of the six panels around the tower. Bidder should note that the City's choice is shower towers with four user stations. The exact configuration and placement of the user stations on the towers will be chosen at the time the order is placed.

Colors

The color of the shower towers to be provided shall be Sandstone, a tan/brown stone-like color, or other similar standard manufacturer's color.

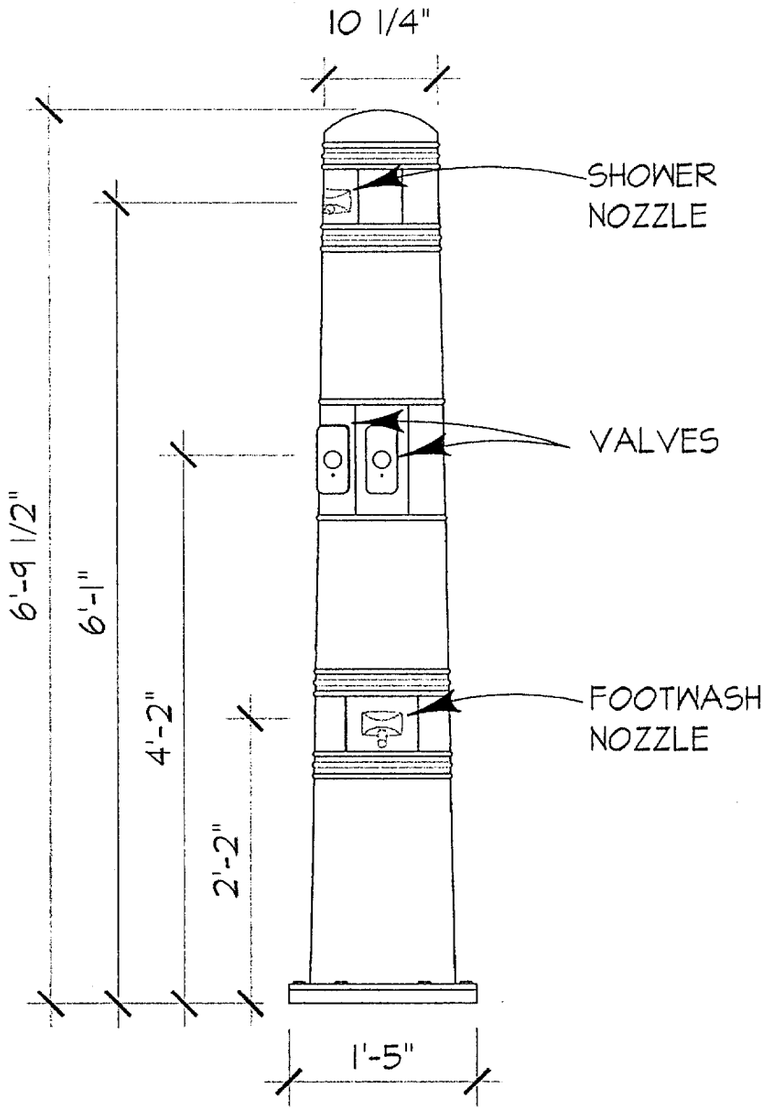
10 1/4"
SHOWER NOZZLE
VALVES
FOOTWASH NOZZLE
6'-9 1/2"
6'-1"
4'-2"
2'-2"
1'-5"

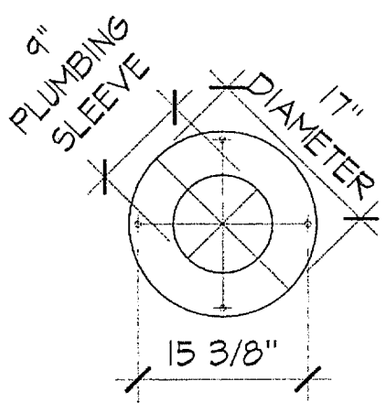
9" PLUMBING SLEEVE
17" DIAMETER
15 3/8"

Mainenance / Service & Repair / Parts

Column Maintenance:

- Cleaning the Shower Tower column periodically will keep your facility looking new. To remove mineral content, calcium buildup, dirt, grime, etc. use Limeaway or similar calcium remover or non-abrasive household cleanser. Use soft brushes or pads that will not scratch the tower exterior. The smooth, flat panels at top, middle, and bottom of the tower will show scratching if wire brushes, steel wool, or other abrasive products are used.
- Shine and protect your tower from dirt and mineral deposits with periodic applications of a non-petroleum based sealant or oil - such as lemon oil.
- Vandalism repair - if necessary - paint can be removed with appropriate solvents and/or pressure cleaning.
- Carving, etching, engraving can be melted out by carefully heating the area with a butane torch. Extreme cases may require a light sanding or grinding first to scuff up the area, which aids the melting out process. Hopefully you'll never need to do this.

Control Valve Mantenance:

- The control valves have moving parts which can wear with use. Please refer to the valve parts and tech sheet to review the internal works of the valve body and push button, self-closing cartridge mechanism. Periodic service and cleaning of the cartridge mechanism will ensure proper operation. See our Cartridge Cleaning and Service Procedure sheet for step-by-step instructions. Like any mechanism with moving parts, cleaning and lubrication will prolong life and provide proper operation.
- Water supply with high calcium or mineral content will cause build-up and drag on the moving parts of the cartridge, which may require more frequent cleaning, based on use. You might consider installing an in-line filter on your supply.
- Dirt, sand, debris in the water supply can clog the cartridge, which would cause it to not shut off completely. If a supply line is ruptured and repaired, remove the cartridges from the tower and flush the supply thoroughly before re-installing the cartridges.
- Spare parts, for example an extra NS-1 replacement cartridge on hand, can help you keep your facilities up and running. It's simple to exchange cartridges in order to perform service and cleaning, to keep your tower in operation.
- Simple design and few parts make becoming familiar with the control valve easy.
- Nationwide distribution makes getting spare parts convenient and quick, either through Shower Tower, Inc. or your local plumbing wholesaler.
- Clean mineral deposits, dirt, grime, etc. from the exterior of the fixtures with Limeaway or similar, non-abrasive cleansers. "Sheila Shine" is a recommended cleaner for stainless steel and chrome.
- Exterior escutcheons and cover plates can be ordered separately in needed.

Shower / Foot-wash nozzle maintenance:

- Periodic cleaning to remove mineral deposits, water stains, etc.
- Spray pattern can be adjusted from a fine mist to a jet spray by turning the 1/8" Allen screw up in the nozzle. Counter-clockwise to mist, clockwise to jet.

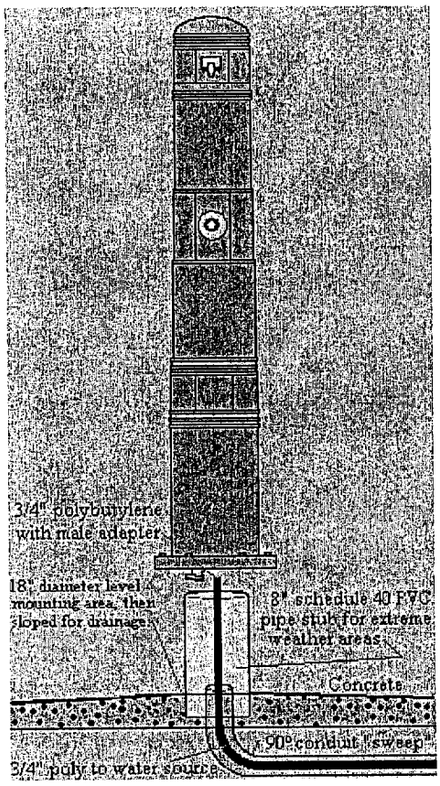

Winterizing / Freeze protection:

- Winterize your Shower Tower like any other outdoor plumbing. Drain and remove push button cartridges to prevent cracking and freeze damage. Shower Towers are so easy to install that you may consider storing the tower for the winter months. Shower Tower does not have a drain port, so you might consider installing a drain in your supply line.

©2005 ShowerTower, Inc.
970 Country Club Road, Sanford, FL 32773
Phone: 407-328-9942 || Fax: 407-328-9942 || Toll Free: 800-330-9073

Shower Tower® Installation

Shower Tower is very simple to install. Each tower is pre-plumbed and ready to use. Each tower is less than 200 pounds in weight, depending on the number of plumbing fixtures, making it unnecessary for the use of any special equipment or lifts. Two persons can easily do installation.

Since each site varies, along with drainage requirements and mounting surfaces, Shower Tower, Inc. does not provide anchoring hardware with your purchase. We offer installation suggestions, but building codes and personal preferences may dictate your individual installation.

Plumbing connection:

Your 3/4" male hose thread fitted supply line, under a minimum 40-PSI and 20 GPM, will easily operate our six-station tower. Your supply line should be thoroughly flushed to remove any debris, as PVC shavings, sand, etc., in the line can cause the valves not to shut completely.

Shower Tower's 3/4" female hose threaded connection hose is attached to your supply line and the tower is bolted to your surface. That's all there is to it!

Shower Tower has one supply line and is not equipped with temperature mixing valves. If tempered water is desired, mixing must be done prior to the supply connection to the Shower Tower.

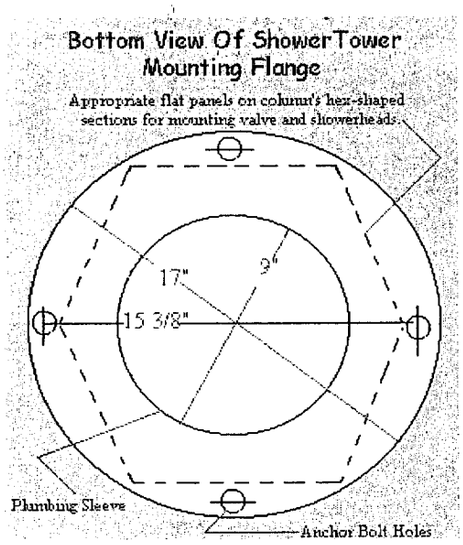

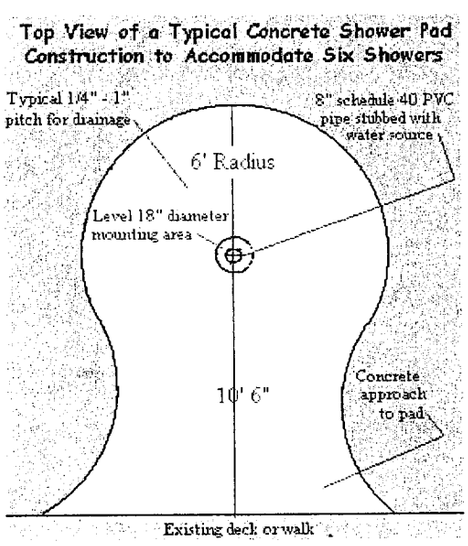

In more detail, we suggest ....

On a shower pad with existing water supply line, stubbed up approximately 6 inches, place the tower over the stub and position it to provide the user "stations" in the position on the pad desired. For example, if the tower is being placed at the edge of a deck or pad, make sure the valves and nozzles face the direction you intended. Mark the pad for anchor / bolt placement. Drill holes in deck for anchoring. Stainless steel or galvanized 3/8" x 5" lag bolts and appropriate washers, with 3/8" long lag anchors are plenty sufficient to firmly hold the tower in place. Flush the water supply line and place the tower over the stub in the desired position / placement. The mounting area for the base of the Shower Tower should be approximately 18" in diameter and level. If the mounting area is pitched, you may want to shim the tower to plumb position.

Leaning the tower over at an angle to expose the connection hose at the bottom of the tower, connect the tower connection hose to the supply line, pressurize and check for proper fitting / no leaks.

With a good connection and under pressure, slowly bring the tower to the upright position while pushing the connection hose up into the bottom of the tower, making sure you do not crimp the connection hose. Align the bolt holes with the tower base and bolt the tower in place. Consider painting the bolts and washers to match the tower color.

If you desire to pre-set anchor bolts in new concrete, the diagram of the Bottom View of Shower Tower Mounting Flange will be useful. Proper consideration of the tower configuration while setting the anchor bolts will help assure to achieve desired positioning of the tower upon installation.

See the diagram to the left for a top view of a typical concrete shower pad to accommodate a Shower Tower that would be used from various sides.

Form the pad in any desired shape, while pitching the pad away from the tower for drainage. Level the mounting area in the center of the pad, approximately 18" in diameter, with water supply line centered.

©2005 ShowerTower, Inc.
970 Country Club Road, Sanford, FL 32773
Phone: 407-328-9942 || Fax: 407-328-9942 || Toll Free: 800-330-9073

CITY OF LONG BRANCH
BID DOCUMENT CHECKLIST

REQUIRED BY OWNER		READ, SIGNED & SUBMITTED
■	EXECUTED BID PROPOSAL FORM	☑
■	STOCKHOLDER DISCLOSURE CERTIFICATION	☑
■	NON-COLLUSION AFFIDAVIT	☑
■	ACKNOWLEDGEMENT OF RECEIPT OF ADDENDA	☑
■	BID/PROPOSAL SECURITY (IN THE AMOUNT OF 10% OF THE BID, NOT TO EXCEED $20,000)	☑
☐	CERTIFICATE OF SURETY	☐
■	BUSINESS REGISTRATION CERTIFICATE	☑
■	AFFIRMATIVE ACTION QUESTIONAIRE	☑
☐	INSURANCE CERTIFICATE(S)	☐
■	REFERENCES	☑
☐	OTHER –	☐
		REVIEWED
■	MANDATORY AFFIRMATIVE ACTION LANGUAGE	☑
■	AMERICANS WITH DISABLILITIES ACT OF 1990	☑
☐	PREVAILING WAGE REGULATIONS	☐

CITY OF LONG BRANCH
PROPOSAL FORM

Proposal
of:.....
ATLANTIC PLUMBING SUPPLY CORP.
Address:.....700 JOLINE AVENUE.....
LONG BRANCH, NJ 07740
.....PHONE (732) 229-0334.....
FAX (732) 229-7948
.....

In accordance with the Notice to Bidders advertisement of the City of Long Branch inviting Proposals for:

B-2008-10 Shower Towers

.....

.....

in conformity with the attached specifications, I/we hereby certify that I am/we are the only person(s) with interest in this Proposal as principal(s), that it is made without collusion with any person, firm or corporation, that an examination has been made of the specifications, and that the equipment/materials/services will be delivered/performed within the time specified, at the bid prices detailed on the Proposal Form following.

Accompanying this Proposal is Bid/Proposal Security in the form of a Bid Bond (...), Certified or Cashier's Check (...) Payable to the order of the City of Long Branch in the sum of $ 2416.80 , which the undersigned agrees is to be forfeited as liquidated damages, and not as a penalty, if the Contract is awarded to the undersigned and the undersigned shall fail to execute the contract for the project, or to furnish within the stipulated time, the Performance or Contract Bond, if required in the specifications. Otherwise, the Bid Security will be returned to the undersigned.

If required in the Notice to Bidders and specifications, also accompanying this proposal is a Consent of Surety from a surety company guaranteeing that it will provide the Performance Bond if the undersigned is awarded the contract.

STATE OF NEW JERSEY

BUSINESS REGISTRATION CERTIFICATE

DEPARTMENT OF TREASURY
DIVISION OF REVENUE
P.O BOX 252
TRENTON, N.J. 08646-0252

TAXPAYER NAME:
ATLANTIC PLUMBING SUPPLY CORP.

TAXPAYER IDENTIFICATION#:
222-477-900/000

ADDRESS:
50 LONG BRANCH AVE
LONG BRANCH NJ 07740

EFFECTIVE DATE:
10/13/83

FORM-BRC(08-01)

TRADE NAME:

SEQUENCE NUMBER:
0071608

ISSUANCE DATE:
08/13/04

Acting Director

This Certificate is NOT assignable or transferable. It must be conspicuously displayed at above address.

PROPOSAL FORM
(Cont'd)

The undersigned is an/a (....) individual, (....) partnership, (✓) corporation organized under the laws of the State of NJ, having its principal offices at:

702 Joline Ave Long Branch, NJ 07740

Phone Number 732-229-0334 Fax Number 732-229-7948

Trade Name of Bidder Atlantic Plumbing Supply Corp

Federal I.D. # or Social Security # 22-2477900

1. Signature _____

Name Barry Ratner

Title President

2. Signature _____

Name Frank Marchese

Title Vice President

3. Signature _____

Name _____

Title _____

Signed this 24 day of June, ~~19~~ 2008.

Note: If a partnership all partners must sign. If a corporation, two properly authorized officers must sign. If a proprietorship, the proprietor must sign. Proposals signed by an agent must be accompanied by a Power-of-Attorney for the Principal or Principals involved. Attach additional signature sheets in the above form if necessary.

CITY OF LONG BRANCH
PROPOSAL FORM

Atlantic Plumbing Supply
Bidder's Name

Unit Price for one (1) four user station outdoor Shower Tower, in accordance with the bid specifications (including delivery costs) $ 3,021.00

Three thousand twenty one Dollars
Unit Price in words

Total Bid Price for eight (8) four user station outdoor Shower Towers, in accordance with the bid specifications (including delivery costs) $ 24,168.00

Twenty Four thousand one Hundred Sixty Eight Dollars
Total Bid Price in words

Delivery time :
Units will be delivered within 10-14 calendar days of date of receipt of the order.

STOCKHOLDER DISCLOSURE CERTIFICATION
This Statement Shall Be Included with Bid Submission

Name of Business _____

☑ I certify that the list below contains the names and home addresses of all stockholders holding 10% or more of the issued and outstanding stock of the undersigned.

OR

☐ I certify that no one stockholder owns 10% or more of the issued and outstanding stock of the undersigned.

Check the box that represents the type of business organization:

☐ Partnership ☐ Corporation ☐ Sole Proprietorship
☐ Limited Partnership ☐ Limited Liability Corporation ☐ Limited Liability Partnership
☑ Subchapter S Corporation ☐ Corporation-Other _____

Sign and notarize the form below, and, if necessary, complete the stockholder list below.

Stockholders:

Name: Barry Ratner
Home Address: 4 Cottage Lane
Marlboro, NJ 07746

Name: Frank Marchese
Home Address: 12 Bridle Dr.
W Long Branch, NJ 07764

Name: _____
Home Address: _____
_____

Name: _____
Home Address: _____
_____

Name: _____
Home Address: _____
_____

Name: _____
Home Address: _____
_____

Subscribed and sworn before me this 25 day of June, 2008

(Notary Public)

My Commission Expires

Notary Public
State of New Jersey
Patrick B. Mason Jr.
My Appointment Expires
March 7, 2012

(Affiant)

Barry Ratner, Pres
(Print name & title of affiant)

(Corporate Seal)

NON-COLLUSION AFFIDAVIT

State of New Jersey
County of Monmouth ss:

I, Barry Ratner (name of affiant) residing in Marlboro (name of municipality)
in the County of Monmouth and State of NJ of
full age, being duly sworn according to law on my oath depose and say that:
I am President (title or position) of the firm of Atlantic (name of firm)
Plumbing Supply, the bidder making this Proposal for
the bid entitled Purchase of Show Trailer (title of bid proposal), and that I executed the said
proposal with full authority to do so that said bidder has not, directly or indirectly entered into any agreement, participated in any collusion, or otherwise taken any action in restraint of free, competitive bidding in connection with the above named project; and that all statements contained in said proposal and in this affidavit are true and correct, and made with full knowledge that the **City of Long Branch** relies upon the truth of the statements contained in said Proposal, and in the statements contained in this affidavit in awarding the contract for the said project.

I further warrant that no person or selling agency has been employed or retained to solicit or secure such contract upon an agreement or understanding for a commission, percentage, brokerage, or contingent fee, except bona fide employees or bona fide established commercial or selling agencies maintained by
Atlantic Plumbing Supply Corp.
(Name of firm)

Subscribed and sworn to
before me this day
25th, June, 2008

(Signature of affiant)

Barry Ratner, Pres
(Type or print name of affiant under signature)

Signature of Notary Public

(Seal)

My Commission expires Notary Public
State of New Jersey
Patrick S. Mason Jr.
My Appointment Expires
March 7, 2012

Certification 7989

CERTIFICATE OF EMPLOYEE INFORMATION REPORT

RENEWAL

This is to certify that the contractor listed below has submitted an Employee Information Report pursuant to N.J.A.C. 17:27-1.1 et seq. and the State Treasurer has approved said report. This approval will remain in effect for the period of 15-MAY-2005 to 15-MAY-2012

ATLANTIC PLUMBING SUPPLY CORP.
2810 RT. 37 EAST
TOMS RIVER NJ 08753

State Treasurer

REQUIRED EVIDENCE
AFFIRMATIVE ACTION REGULATION
P.L. 1975, C. 127 (N.J.A.C. 17:27)

If awarded a contract, all procurement and service contractors will be required to comply with the requirements of P.L. 1975, c. 127, (N.J.A.C. 17:27). Within seven (7) days after receipt of the notification of intent to award the contract or receipt of the contract, whichever is sooner, the contractor should present one of the following to the Purchasing Agent.

1. A photocopy of a valid letter from the U.S. Department of Labor that the contractor has an existing federally-approved or sanctioned Affirmative Action Plan (good for one year from the date of the letter).

OR

2. A photocopy of approved Certificate of Employee Information Report from the State of New Jersey.

OR

3. An Affirmative Action Employee Information Report (Form AA302).

OR

4. All successful construction contractors must submit, within three days (3) of the signing of the contract, an Initial Project Manning Report (AA201) for any contract award that meets or exceeds the Public Agency bidding threshold (available upon request).

NO FIRM MAY BE ISSUED A CONTRACT UNLESS IT COMPLIES WITH THE AFFIRMATIVE ACTION REGULATIONS OF P.L. 1975, C. 127.

The following questions must be answered by all bidders:

1. Do you have a federally-approved or sanctioned Affirmative Action Program?

   ___Yes ✓ No If yes, please submit copy of such approval.

2. Do you have a Certificate of Employee Information Report Approval?

   ✓ Yes ___No If yes, please submit copy of such certificate.

The undersigned contractor certifies that he is aware of the commitment to comply with the requirements of P.L. 1975, c. 127, and agrees to furnish the required documentation pursuant to law.

COMPANY: Atlantic Plumbing Supply Corp.

SIGNATURE: _____

TITLE: President

NOTE: A CONTRACTOR'S BID MUST BE REJECTED AS NON-RESPONSIVE IF A CONTRACTOR FAILS TO COMPLY WITH REQUIREMENTS OF P.L.1975, C. 127, WITHIN THE REQUIRED TIME FRAME.

Atlantic Plumbing Supply Corp.
List of Municipal References

1. Township of South Brunswick
   Robert Mitchel – Purchasing 732-329-4000 x7379

2. City of New Brunswick
   Willie Weaver – 732-745-5109

3. City of Trenton
   Karen Marut – Purchasing 609-989-3138

4. Long Beach Township
   Dana Vickers – 609-492-6314

Additional references available if needed.

R# 219-08

RESOLUTION APPROVING 2008 / 2009
LIQUOR LICENSE RENEWAL OF RO-VA ENTERPRISES, INC.
1325-33-046-006

WHEREAS, Ro-Va Enterprises, Inc. had filed a verified petition to the Director of the Division of ABC asking for a special ruling to be issued to allow the City to renew their license for the 2008/09 and 2009/10 license term; and

WHEREAS, on June 23, 2008 the Division of ABC sent a ruling determining that good cause exits for the City to considerer the renewal application for the 2008/09 license term.

BE IT FURTHER RESOLVED by the City Council of the City of Long Branch that they hereby approve the license held by Ro-Va Enterprises, Inc. state license # 1325-33-046-006 for the 2008/09 license term.

MOVED:
SECONDED:

AYES:
NAYES:
ABSENT:
ABSTAIN:
DATED:

OLD ALE HOUSE	POCKET STATUS

RO-VA ENTERPRISES, INC

OWNERS: ROSA CARDALEIRO

STATE LICENSE #: 1325-33-046-006
TRANSFERRED ON:
STATUS: INACTIVE - LAST DAY USED WAS 9/3/05
PHONE#:

SPECIAL RULING RECEIVED FOR 08/09 AND 09/10

R# 220-08

RESOLUTION TO REFUND OVERPAYMENT
OF TAXES DUE TO A
TAX COURT OF NEW JERSEY
JUDGMENT

WHEREAS, the City of Long Branch has received from the Tax Court of New Jersey judgment(s) reducing the assessment on certain property for the years indicated and,

WHEREAS, the taxes on the certain property for the years indicated are overpaid and,

BE IT RESOLVED, that the City of Long Branch refund to the taxpayer(s) shown on the attached sheet the amount of the tax overpaid and,

NOW THEREFORE BE IT RESOLVED, that the Finance Department is hereby authorized to issue an individual check to the taxpayer(s) shown on the attached sheet in the total amount of $51,736.92.

BLOCK	LOT	OWNER	YEAR	AMOUNT
4 120 Lincoln Ave	5	City of Long Branch (apply to future taxes per judgment)	2007	13,308.36
4 120 Lincoln Ave rear	6	City of Long Branch (apply to future taxes per judgment)	2007	12,690.09
15 1169 Ocean Ave	12	Adjmi, Alice 1169 Ocean Avenue Long Branch, NJ 07740	2007	3,025.36
17 34 Park Ave	1.03	Zendell, David J. & Randy 787 Butternut Dr. Franklin Lakes, NJ 07417	2007	3,308.23
28 39 Park Ave	7	Rosen, Lionel & Dolores 39 Park Avenue Long Branch, NJ 07740	2007	6,763.29
87 27 Waterview	5.27	The Irwin Law Firm, PA Attorney for Ralph Tawil 80 Main Street West Orange, NJ 07052	2007	731.42
418 268 Ocean Ave. No.	6	Allison, Robert & Evelyn 268 Ocean Avenue No. Long Branch, NJ 07740	2007	673.50
431 444 Ocean Blvd No.	1	JJUD, Inc. 1062 Green Grove Road Ocean, NJ 07712	2007	11,236.67

R# 221-08

RESOLUTION AUTHORIZING CONTRACT FOR LEGAL SERVICES AS LABOR ATTORNEY

WHEREAS, the City of Long Branch has the need to retain a firm to provide legal services as Labor Attorney; and

WHEREAS, the City, through a Fair and Open Process, has advertised on its website the solicitation for proposals for said services (Fair and Open #007-08), received and opened in public on June 30, 2008, and proposals were received from the following firms:

Apruzzese, McDermott, Mastro & Murphy, PC, Warren, NJ
Parker McCay, PA, Marlton, NJ

WHEREAS, the firm of Apruzzese, McDermott, Mastro & Murphy has extensive experience in public sector labor relations, and has provided legal services to the City of Long Branch relative to labor matters for more than nine years, and the firm has the expertise and resources to provide the level of services required by the City; and

WHEREAS, it is the recommendation of the Mayor and Business Administrator that it is in the best interest of the City to award a contract to this firm for services as required by the City; and

WHEREAS, all contractors awarded professional service contracts are required to comply with City Ordinance #18-05, and execution of the contract documents, annexed hereto, will serve as acknowledgement by Apruzzese, McDermott, Mastro & Murphy that it complies with the Ordinance, and has not made any political contributions that would bar it from being awarded a contract with the City of Long Branch; and

WHEREAS, the Chief Financial Officer of the City of Long Branch has certified, in accordance with the Certification of Funds Form attached hereto, that funds are available for this contract in the **2008 Budget, Office of the City Attorney, Misc. Other Expense, Appropriation #8-01-014-502, in the amount of $50,000, with continuation of this contract contingent upon provision of additional funds through appropriation transfer, emergency appropriation, and/or provision of adequate funds in the 2009 budget.**

NOW, THEREFORE, BE IT RESOLVED that the City Council of the City of Long Branch hereby authorizes an annual contract with **Apruzzese, McDermott, Mastro & Murphy, PC,** for legal services as labor attorney, in accordance with the contract documents annexed hereto, for the term of July 1, 2008 through June 30, 2009, for an amount not to exceed $95,000.

BE IT FURTHER RESOLVED that the Mayor and Clerk are hereby authorized to execute any and all necessary document pursuant to said agreement and, based upon request of the Department of Administration and contingent upon availability of funds, the Purchasing Agent is authorized to issue purchase orders for the various matters as may be assigned under this contract.

CITY OF LONG BRANCH
OFFICE OF THE FINANCE DIRECTOR
344 BROADWAY
LONG BRANCH, NJ 07740

CERTIFICATION OF CHIEF FINANCIAL OFFICER

As the Chief Financial Officer of the City of Long Branch, I certify that funds are available for award of the following contracts/agreements:

2008-2009 ANNUAL CONTRACT FOR LEGAL SERVICES AS LABOR COUNSEL

Said contract being made as follows:

APRUZZESE MCDERMOTT MASTRO & MURPHY $95,000

Said funds being available in the form of:

2008 BUDGET
OFFICE OF CITY ATTORNEY
MISC. OTHER EXPENSE
LABOR ATTORNEY
APPRO. #8-01-014-502 $50,000 *

***CONTINUATION OF THIS CONTRACT IS CONTIENGET UPON PROVISION OF ADDITIONAL FUNDS THROUGH APPROPRIATION TRANSFER, EMERGENCY APPROPRIATION, AND/OR PROVISION OF ADEQUATE FUNDS IN THE 2009 BUDGET.**

Ronald J. Mehlhorn, Sr., C.P.A., R.M.A.
Finance Director, Chief Financial Officer

Date

AGREEMENT

THIS AGREEMENT MADE THIS DAY OF ,

BETWEEN: **CITY OF LONG BRANCH**
344 Broadway
Long Branch, NJ 07740

Hereinafter called the **CITY**

AND

APRUZZESE, MCDERMOTT, MASTRO & MURPHY
P O BOX 112
LIBERTY CORNER, NJ 07938

WITNESSETH:

WHEREAS, the City of Long Branch is desirous of retaining Apruzzese, McDermott, Mastro & Murphy to provide services regarding legal services as labor attorney in accordance with the proposal attached hereto, for an amount not to exceed $95,000.00; and

NOW, THEREFORE, in consideration for the execution of this Agreement and the supplying of services hereunder, the parties agree as follows:

1. The City of Long Branch hereby enters the within agreement for a sum not to exceed $95,000.00.

2. Apruzzese, McDermott, Mastro & Murphy agrees to provide services.

3. Contractor will submit billing and vouchers on a monthly basis.

4. The term of said contract shall be July 1, 2008 through June 30, 2009.

5. The City will not honor any of your invoices that exceed the contract amount unless, prior to you or your firm exceeding that amount, you notify the City so that an amendment to your contract can be considered by the Mayor and Council, and, if appropriate, approved.

Due to the number of professional service contractors the City deals with, it is important for each contractor to recognize the limit of their contract, and

advise the City Administrator and City Attorney of the need to continue service with an amendment to the contract.

The Administrator and Attorney would then make the appropriate recommendation to the City Council based upon the facts and circumstances, as they exist at that time.

However, please understand that this application must be made **in advance of providing any services** the cost of which would exceed the contract amount, and only after having an amended contract approved by resolution of City Council will you be authorized to proceed.

6. The Contractor certifies it complies with Affirmative Action regulations. During the performance of this contract, the contractor agrees as follows:

The contractor or subcontractor, where applicable will not discriminate against any employee or applicant for employment because of age, race, creed, color, national origin, ancestry, marital status, affectional or sexual orientation, or sex. Except with respect to affectional or sexual orientation, the contractor will take affirmative action to ensure that such applicants are recruited and employed, and that employees are treated during employment, without regard to their age, race, creed, color, national origin, ancestry, marital status, affectional or sexual orientation or sex. Such action shall include, but not be limited to the following: employment, upgrading, demotion, or transfer; recruitment or recruitment advertising; layoff or termination; rates of pay or other forms of compensation; and selection for training including apprenticeship. The contractor agrees to post in conspicuous places, available to employees and applicants for employment, notices to be provided by the Public Agency Compliance Officer, setting forth provisions of this non-discrimination clause.

The contractor or subcontractor, where applicable, will, in all solicitations or advertisements for employees placed by or on behalf of the contractor, state that all qualified applicants will receive consideration for employment without regard to their age, race, creed, color, national origin, ancestry, marital status, affectional or sexual orientation or sex.

The contractor or subcontractor, where applicable, will send to each labor union or representative of workers with which it has a collective bargaining agreement or other contract or understanding, a notice, to be provided by the agency contracting officer, advising the labor union or workers' representative of the contractor's commitments under this act and shall post copies of the notice in conspicuous places available to employees and applicants for employment.

The contractor or subcontractor, where applicable, agrees to comply with any regulations promulgated by the Treasurer pursuant to NJSA 10:5-36 et. seq. as amended and supplemented from time to time and the Americans with Disabilities Act.

The contractor or subcontractor agrees to make good faith efforts to employ minority and women workers consistent with the applicable county employment goals established in accordance with NJAC 17:275.2, or a binding determination of the applicable county employment goals determined by the Division, pursuant to NJSA 17:275.2.

The contractor or subcontractor agrees to inform in writing its appropriate recruitment agencies including, but not limited to, employment agencies, placement bureaus, colleges, universities, labor unions, that it does not discriminate on the basis of age, creed, color, national origin, ancestry, marital status, affectional or sexual orientation or sex, and that it will discontinue the use of any recruitment agency which engages in direct or indirect discriminatory practices. The contractor or subcontractor agrees to revise any of its testing procedures, if necessary, to assure that all personnel testing conforms with the principals of job related testing, as established by the statutes and court decisions of the state of New Jersey and as established by applicable federal law and applicable federal court decisions.

In conforming with the applicable employment goals, the contractor or subcontractor agrees to review all procedures relating to transfer, upgrading, down grading and lay off to ensure that all such actions are taken without regard to age, creed, color, national origin, ancestry, marital status, sex, affectional or sexual orientation, and conform with the applicable employment goals, consistent with the statutes and court decisions of the state of New Jersey, and applicable federal law and applicable Federal court decisions.

The contractor and its subcontract shall furnish such reports or other documents to the Division of contract compliance and EEO as maybe requested by the office from time to time in order to carry out the purposes of these regulations, and public agency shall furnish information as may be requested by the Division of Contract Compliance and EEO for conducting a compliance investigation pursuant to subchapter 10 of the administrative code of NJAC 17:27.

A contractor, subcontractor or supplier who fails to provide proof of business registration or provides false business registration information shall be liable to a penalty or $25 for each day of violation, not to exceed $50,000 for each business registration not properly provided or maintained under a contract with the contracting agency. Information of the law and its requirements is available by calling (609)292-9292.

7. The City shall publish notice of said award of this agreement in the legal ad section of its official newspaper, and shall have on file for public inspection a copy of this contract and authorizing resolution as prescribed by law.

8. "The contractor, in executing this contract document, acknowledges that it complies with City Ordinance # 18-05, annexed hereto, and New Jersey ELEC laws, rules and regulations, and has not given any political contribution that would bar it from being awarded this contract."

9. Contractor is advised that the responsibility to file an annual disclosure statement on political contributions with the New Jersey Election Enforcement commission pursuant to N.J.S.A. 19:44A-20.3 (P.L. 205, c, 271, s.3), if the contractor receives contracts in excess of $50,000 from public Entities in a calendar year. It is the contractor's responsibility to determine if filing is necessary. Additional information on this requirement is available from ELEC at 888-313-3532 or at www.elec.state.nj.us.

10. This Contract shall be binding upon the City has caused this instrument to be signed by **ADAM SCHNEIDER, MAYOR** attested by **IRENE A. JOLINE, CLERK** and the Municipal Seal to be hereunto affixed and the **CONTRACTOR** hereunto set their hand and seals, or caused these presents to be signed by their proper corporate officers and their proper corporate seal to be hereto affixed, the day and year first above mentioned.

CITY OF LONG BRANCH

by:_____
Adam Schneider, Mayor

Attested by:

Date:_____

_____
Irene A. Joline, RMC
City Clerk

CONTRACTOR
By:_____

Title:_____

Attested by:

_____

Dated:_____

LAW OFFICES
APRUZZESE, McDERMOTT, MASTRO & MURPHY
A PROFESSIONAL CORPORATION

VINCENT J. APRUZZESE (1)(2)*
FRANK X. McDERMOTT (1)(2)*
FRANCIS A. MASTRO (1)*
FREDERICK T. DANSER, III
MAURICE J. NELLIGAN, JR. (4)
BARRY MARELL
ROBERT T. CLARKE
MARK J. BLUNDA (1)◊
JAMES L. PLOSIA, JR.
LISA BARRÉ-QUICK (1)(2)(3)♦
JOHN P. HARRINGTON
ROBERT J. MERRYMAN (3)
ARTHUR R. THIBAULT, JR.
LINDA GANZ OTT
RYAN S. CAREY (2)
JONATHAN F. COHEN

(MAIL TO)
P. O. BOX 112
LIBERTY CORNER, N.J. 07938

(DELIVER TO)
SOMERSET HILLS CORPORATE CENTER
25 INDEPENDENCE BOULEVARD
WARREN, N.J. 07059

(908) 580-1776

FAX: (908) 647-1492

WEBSITE: www.ammm.com

JAMES F. MURPHY
(1938-1990)

521 FIFTH AVENUE
SUITE 1700
NEW YORK, NEW YORK 10017
(212) 292-4218

ALSO D.C.(1) N.Y.(2) PA.(3) MD.(4)
◊CERTIFIED BY THE SUPREME COURT OF NEW JERSEY AS A CIVIL TRIAL ATTORNEY
*OF COUNSEL
♦COUNSEL

June 30, 2008

Irene Joline
City Clerk
City of Long Branch
344 Broadway
Long Branch, New Jersey 07740

Re: Labor Counsel for City of Long Branch – Qualifications Submission

Dear Ms. Joline:

This will respond to the Solicitation for Qualification Statements for Labor Counsel made by the City of Long Branch. We currently serve as Labor Counsel for Long Branch, and this application is for consideration to renew that contract through June 30, 2009.

The name, address and telephone number of the firm are listed above. I will continue to be the attorney primarily responsible for representing the City of Long Branch with respect to labor issues. I have practiced labor and employment law since graduation from law school in 1988. Since that time I have worked on all manner of issues relating to public employment issues, including but not limited to negotiations with blue collar, white collar, crossing guard,

and supervisory unions; PERC issues; interest arbitration with public safety unions; grievance arbitrations; and issues relating to the Department of Personnel.

The principals of the firm are Robert T. Clarke, Frederick T. Danser, Maurice J. Nelligan, Mark J. Blunda and Barry M. Marell, each with a 20% ownership interest and each with a business address as set forth in the letterhead. Our firm was established in 1965 and has been under current management for the last six (6) years. The firm is in compliance with all applicable affirmative action requirements. There are no judgments, claims or suits pending against the firm and the firm has not been involved in any bankruptcy or reorganization proceedings. All attorneys associated with the firm are licensed to practice law in the State and Federal Courts of New Jersey.

Our firm has and would continue to represent the City in all aspects of labor and employment law matters including negotiations of all labor contracts, labor arbitrations and matters before administrative agencies such as PERC. None of these services would be subcontracted but instead all would be performed by attorneys from our firm.

Please feel free to contact any of the references listed below if you have any questions about our firm. The appropriate contact persons of the municipalities we represent are:

Terrence Malloy, Administrator – 201-858-6000
City of Bayonne, 630 Avenue C, Bayonne, NJ

Phil Huhn, Administrator – 732-988-5200
Township of Neptune, 25 Neptune Blvd., Neptune, NJ

Robbin Kirk, Administrator – 732-681-3700
Borough of Belmar, 601 Main Street, Belmar, NJ

Frank Bradley, Administrator – 908-688-2800
Township of Union, 1976 Morris Avenue, Union, NJ

Tom Atkins, Manager – 908-322-6700
Township of Scotch Plains, 430 Park Avenue, Scotch Plains, NJ

Jim Gildea, Administrator – 908-789-6055
Town of Westfield, 425 E. Broad Street, Westfield, NJ

This firm has represented the City for labor matters since 2000. In addition, in the 1980's and early 1990's, Apruzzese McDermott represented Long Branch with respect to labor relations issues. That representation consisted of negotiating labor agreements; interest arbitration with the City's police and fire unions; grievance arbitration; handling disciplinary matters through the Department of Personnel and the judicial level; and ongoing advice and opinions concerning labor relations issues.

The following is a list of municipalities for which this firm currently provides legal representation on labor relations issues:

Avon by the Sea; City of Bayonne; Borough of Belmar; Borough of Berlin; Township of Bernards; Bernards Township Sewerage Authority; Borough of Bernardsville; Township of Brick; Borough of Chatham; Clark Township; Borough of Deal; Borough of Eatontown; Borough of Fanwood; Borough of Highlands; Holmdel Township; Borough of Hopatcong; Howell Township; Borough of Interlaken; Township of Jackson; Borough of Keansburg; Town of Kearny; City of Long Branch; Long Branch Parking Authority; Long Branch

Sewerage Authority; Long Hill Township; Madison-Chatham Joint Meeting; Township of Mendham; Borough of Metuchen; Township of Mt. Olive; Neptune City Borough; Township of Neptune; Neptune Township Board of Fire Commissioners; Neptune Township Sewerage Authority; Borough of New Providence; Township of Old Bridge; Princeton Township; Borough of Raritan; Borough of Red Bank; Borough of Roseland; Borough of Sayreville; Township of Scotch Plains; City of South Amboy; Borough of South Bound Brook; Township of South Brunswick; City of Summit; Township of Union; and Town of Westfield.

Following are resumes of key employees who have and will continue to represent the interests of the City of Long Branch if our firm is selected.

James L. Plosia Jr. has over 20 years of experience representing public sector employers in all aspects of labor and employment issues. Mr. Plosia has a BA from Rutgers University in New Brunswick, and a JD from Rutgers Law School in Newark. He has worked as an adjunct professor in FDU's MBA program.

Arthur R. Thibault Jr. graduated cum laude from the Thomas M. Cooley Law School and was admitted to practice law in New Jersey in 1998. Mr. Thibault concentrates his practice in employment law and litigation in cases involving claims ranging from discrimination to retaliation. In addition to litigation, he also advises our clients on a range of labor and employment issues.

If chosen to continue to represent the City of Long Branch with respect to labor relations issues, Apruzzese McDermott will continue to provide legal services to the City at the hourly rate of $160.00 for attorneys and $95.00 an hour for paralegals.

The organization of our firm consists of 15 lawyers with five principals. The firm employs one paralegal and nine support staff. As the key contact person, I am the principal primarily responsible for all matters involving Long Branch. No City employee or elected officials of the City are relatives of any of the Principals of our firm.

Thank you for your consideration in this Qualification Statement process involving the consideration of our firm to continue as labor counsel for the City of Long Branch.

Sincerely yours,

James L. Plosia Jr.

JLP:CAP\S:\CAP\Long Branch City\2008 Proposal Ltr.doc

NON-COLLUSION AFFIDAVIT

STATE OF NEW JERSEY
COUNTY OF SOMERSET

I, James L. Plosia Jr., residing in Chester, in the County of Morris and State of New Jersey of full age, being duly sworn according to law on my oath dispose and say that:

I am an attorney of the firm of Apruzzese, McDermott, Mastro & Murphy, P.C., the bidder making this Proposal for the request for proposal entitled Request for Qualifications for Professional Service Contract, and that I executed the said proposal with full authority to do so, that said professional service contractor has not, directly or indirectly entered into any agreement, participated in any collusion, or otherwise taken any action in restraint of free, competitive contracting in connection with the above named service; and that all statements contained in said proposal and in this affidavit are true and correct, and made with full knowledge that the **City of Long Branch** relies upon the truth of the statements contained in said Proposal, and in the statements contained in this affidavit, in awarding the contract for the said services.

I further warrant that no person or selling agency has been employed or retained to solicit or secure such contract upon an agreement or understanding for a commission, percentage, brokerage, or contingent fee, except bona fide employees or bona fide established commercial or selling agencies maintained by Apruzzese, McDermott, Mastro & Murphy.

Subscribed and sworn to
before me this day

_____, 2008

My Commission expires:

CLARA M. LUNGO
A Notary Public of New Jersey
Commission Expires

_____
James L. Plosia Jr.

_____
(signature of notary)

BUSINESS ENTITY DISCLOSURE CERTIFICATION
FOR NON-FAIR AND OPEN CONTRACTS
Required Pursuant To N.J.S.A. 19:44A-20.8
<NAME OF CONTRACTING AGENCY>

Part I – Vendor Affirmation

The undersigned, being authorized and knowledgeable of the circumstances, does hereby certify that Apruzzese, McDermott, Mastro & Murphy, P.C., has not made and will not make any reportable contributions pursuant to N.J.S.A. 19:44A-1 et seq. that, pursuant to P.L. 2004, c. 19 would bar the award of this contract in the one year period preceding *(date of award scheduled for approval of the contract by the governing body)* to any of the following named candidate committee, joint candidates committee; or political party committee representing the elected officials of the *<name of entity of elected officials>* as defined pursuant to N.J.S.A. 19:44A-3(p), (q) and (r).

NONE	

Part II – Ownership Disclosure Certification

[X] I certify that the list below contains the names and home addresses of all owners holding 10% or more of the issued and outstanding stock of the undersigned.

Check the box that represents the type of business entity:

[ ] Partnership [X] Corporation [ ] Sole Proprietorship [ ] Subchapter S Corporation
[ ] Limited Partnership [ ] Limited Liability Corporation [ ] Limited Liability Partnership

Name of Stock or Shareholder	Home Address
Robert T. Clarke	36 Cedar Road, Whitehouse Station, NJ 08889
Frederick T. Danser	57 Sycamore Court, Basking Ridge, NJ 07920
Maurice J. Nelligan	57 Country Acres Drive, Hampton, NJ 08827
Barry Marell	9 Trout Brook Lane, Mendham, NJ 07945
Mark J. Blunda	348 South Blvd., Spring Lake, NJ 07762

Part 3 – Signature and Attestation:

The undersigned is fully aware that if I have misrepresented in whole or part this affirmation and certification, I and/or the business entity, will be liable for any penalty permitted under law.

Name of Business Entity: Apruzzese, McDermott, Mastro & Murphy, P.C.

Signed: _____ Title: Treasurer
Print Name: _____ Date: _____

Subscribed and sworn before me this ___ day of _____, 2008.

My Commission expires: JESSICA M. LONGO
A Notary Public of New Jersey
My Commission Expires

_____
(Affiant)
Barry Marell, Treasurer
(Print name & title of affiant) (Corporate Seal)

EXHIBIT A

P.L. 1975, C. 127 (N.J.A.C. 17:27)
MANDATORY AFFIRMATIVE ACTION LANGUAGE
PROCUREMENT, PROFESSIONAL AND SERVICE CONTRACTS

During the performance of this contract, the contractor agrees as follows:

The contractor or subcontractor, where applicable, will not discriminate against any employee or applicant for employment because of age, race, creed, color, national origin, ancestry, marital status, sex, affectional or sexual orientation. The contractor will take affirmative action to ensure that such applicants are recruited and employed, and that employees are treated during employment, without regard to their age, race, creed, color, national origin, ancestry, marital status, sex, affectional or sexual orientation. Such action shall include, but not be limited to the following: employment, upgrading, demotion, or transfer; recruitment or recruitment advertising; layoff or termination; rates of pay or other forms of compensation; and selection for training, including apprenticeship. The contractor agrees to post in conspicuous places, available to employees and applicants for employment, notices to be provided by the Public Agency Compliance Officer setting forth provisions of this nondiscrimination clause;

The contractor or subcontractor, where applicable will, in all solicitations or advertisements for employees placed by or on behalf of the contractor, state that all qualified applicants will receive consideration for employment without regard to age, race, creed, color, national origin, ancestry, marital status, sex, affectional or sexual orientation;

The contractor or subcontractor, where applicable, will send to each labor union or representative or workers with which it has a collective bargaining agreement or other contract or understanding, a notice, to be provided by the agency contracting officer advising the labor union or workers' representative of the contractor's commitments under this act and shall post copies of the notice in conspicuous places available to employees and applicants for employment.

The contractor or subcontractor, where applicable, agrees to comply with the regulations promulgated by the Treasurer pursuant to P.L. 1975, c. 127, as amended and supplemented from time to time and the Americans with Disabilities Act.

The contractor or subcontractor agrees to attempt in good faith to employ minority and female workers consistent with the applicable county employment goals prescribed by N.J.A.C. 1 7:27-5.2 promulgated by the Treasurer pursuant to P.L. 1975, c. 127, as amended and supplemented from time or in accordance with a binding determination of the applicable county employment goals determined by the Affirmative Action office pursuant to N.J.A.C. 17:27-5.2 promulgated by the Treasurer pursuant to P.L. 1975, c. 127, as amended and supplemented from time to time.

The contractor or subcontractor agrees to inform in writing appropriate recruitment agencies in the area, including employment agencies, placement bureaus, colleges, universities, labor unions, that it does not discriminate on the basis of age, creed, color, national origin, ancestry, marital status, sex, affectional or sexual orientation, and that it will discontinue the use of any recruitment agency which engages in direct or indirect discriminatory practices.

The contractor or subcontractor agrees to revise any of its testing procedures, if necessary, to assure that all personnel testing conforms with the principles of job-related testing, as established by the statutes and court decisions of the State of New Jersey and as established by applicable Federal law and applicable Federal court decisions.

The contractor or subcontractor agrees to review all procedures relating to transfer, upgrading, downgrading and layoff to ensure that all such actions are taken without regard to age, creed, color, national origin, ancestry, marital status, sex, affectional or sexual orientation, and conform with the applicable employment goals, consistent with the statutes and court decisions of the State of New Jersey, and applicable Federal law and applicable Federal court decisions.

The contractor and its subcontractors shall furnish such reports or other documents to the Affirmative Action Office as may be requested by the office from time to time in order to carry out the purposes of these regulations, and public agencies shall furnish such information as may be requested by the Affirmative Action Office for conducting a compliance investigation pursuant to Subchapter 10 of the Administrative Code (N.J.A.C. 17:27).

SUBMITTED BY: Apruzzese, McDermott, Mastro & Murphy, P.C.

NAME OF FIRM

SIGNATURE

Treasurer

TITLE

Date

\s:\cap\proposal forms & letters\forms\mandatory affirmative action form.doc

STATE OF NEW JERSEY

BUSINESS REGISTRATION CERTIFICATE

DEPARTMENT OF TREASURY/
DIVISION OF REVENUE
PO BOX 252
TRENTON, N.J. 08646-0252

TAXPAYER NAME:
APRUZZESE,MCDERMOT,MASTRO & MURPHY PC

TRADE NAME:

TAXPAYER IDENTIFICATION#:
221-911-336/000

SEQUENCE NUMBER:
0934804

ADDRESS:
25 INDEPENDENCE BLVD
WARREN NJ 07059

ISSUANCE DATE:
08/31/04

EFFECTIVE DATE:
07/22/70

Acting Director

FORM-BRC(08-01)

This Certificate is NOT assignable or transferable. It must be conspicuously displayed at above address.

Certification 8149

CERTIFICATE OF EMPLOYEE INFORMATION REPORT

RENEWAL

This is to certify that the contractor listed below has submitted an Employee Information Report pursuant to N.J.A.C. 17:27-1.1 et seq. and the State Treasurer has approved said report. This approval will remain in effect for the period of 15-MAY-2005 to 15-MAY-2012

APRUZZESE, MC DERMOTT, MASTRO & MURPHY, P.C.
25 INDEPENDENCE BLVD.
WARREN TOWNSHIP NJ 07059

State Treasurer

C.271 POLITICAL CONTRIBUTIONS DISCLOSURE FORM

Required Pursuant to N.J.S.A. 19:44A-20.26

This form or its permitted facsimile must be submitted to the local unit no later than ten (10) days prior to the award of the contract.

PART I – Vendor Information

Vendor Name:	Apruzzese, McDermott, Mastro & Murphy, P.C.
Address:	25 Independence Boulevard, P.O. Box 112
City, State & Zip Code:	Liberty Corner, New Jersey 07938

The undersigned being authorized to certify, hereby certifies that the submission provided herein represents compliance with the provisions of N.J.S.A. 19:44A-20.26 and as represented by the Instructions accompanying this form.

Signature	Barry Marell Printed Name	Treasurer Title

PART II – Contribution Disclosure

Disclosure requirement: Pursuant to N.J.S.A. 19:44A-20.26, this disclosure must include all reportable political contributions (more than $300.00 per election cycle) over the 12 months prior to submission to the committees of the government entities listed on the form provided by the local unit.

☐ Check here if disclosure is provided in electronic form.

Contributor Name	Recipient Name	Date	Dollar Amount
Apruzzese, McDermott, Mastro & Murphy, P.C.	Eatontown Demo Campaign 2007	7/30/07	$300.00
" "	Mayor's Ball Committee Neptune Twp.	8/8/07	$320.00
" "	Bishop/Manning for Twp. Committee	10/17/07	$300.00
" "	Eatontown Demo Campaign 2008	2/26/08	$300.00

☐ Check here if the information is continued on subsequent page(s).

CITY OF LONG BRANCH, MUNICIPAL BUILDING, 344 BROADWAY, LONG BRANCH, N.J. 07740 (732) 571-5645

Howard H. Woolley, Jr
Business Administrator

TO: Council Members

FROM: Howard H. Woolley, Jr.
Business Administrator

RE: Contract for Labor Counsel Services

DATE: July 2, 2008

After examining the proposals submitted to the City of Long Branch for Labor Council Services, it is the recommendation of the Mayor and Business Administrator to award Apruzzese, McDermott, Mastro & Murphy a contract for services in the amount of $95,000.00 for the term of July 1, 2008 through June 30, 2009.

Based upon prior history, the City of Long Branch has determined that Apruzzese, McDermott, Mastro & Murphy have the experience, expertise and resources to provide the services required by the City of Long Branch.

HHW:gb

R# 222-08

RESOLUTION AUTHORIZING CONTRACT FOR LEGAL SERVICES AS BOND COUNSEL

WHEREAS, the City of Long Branch has the need to retain a firm to provide legal services as Bond Counsel; and

WHEREAS, the City, through Fair and Open Process #006-08, has advertised on its website the solicitation for proposals for said services, received and opened in public on June 30, 2008, and proposals were received from the following firms:

Lomurro, Davison, Eastman & Munoz, PA, Freehold, NJ
Parker McCay, Marlton, NJ
McManimon & Scotland, LLC, Newark, NJ

WHEREAS, John L. Kraft, of the firm of Lomurro, Davison, Eastman & Munoz has forty years experience as Bond Counsel, and having served as Bond Counsel for eighteen New Jersey counties and hundreds of municipalities; his experience and reputation are renowned throughout the state, and Mr. Kraft has served as Bond Counsel to the City of Long Branch for more than 13 years; and

WHEREAS, it is the recommendation of the Mayor and Business Administrator that it is in the best interest of the City to award a contract to John L. Kraft for services as Bond Counsel through June 30, 2009; and

WHEREAS, all contractors awarded professional service contracts are required to comply with City Ordinance #18-05, and execution of the contract documents and the Political Contribution Affidavit, annexed hereto, will serve as acknowledgement by Lomurro, Davison, Eastman & Munoz that they comply with the Ordinance, and have not made any political contributions that would bar them from being awarded a contract with the City of Long Branch; and

WHEREAS, this contract is issued as an open-ended contract and during the contract year certification of funds will be provided by issuance of a Purchase Order at the time of need for legal services, based upon availability of funds.

NOW, THEREFORE, BE IT RESOLVED that the City Council of the City of Long Branch hereby authorizes an open-ended contract to John L. Kraft, Esq., of the firm of **Lomurro, Davison, Eastman & Munoz** for legal services as bond counsel, in accordance with the contract annexed hereto, for the term of July 1, 2008 through June 30, 2009.

BE IT FURTHER RESOLVED that the Mayor and Clerk are hereby authorized to execute any and all necessary document pursuant to said agreement and, based upon request of the Department of Administration, the Purchasing Agent is authorized, contingent upon availability of funds, to issue purchase orders for the various matters covered under this contract.

AGREEMENT

THIS AGREEMENT MADE THIS DAY OF ,

BETWEEN: **CITY OF LONG BRANCH**
344 Broadway
Long Branch, NJ 07740

Hereinafter called the **CITY**

AND

JOHN L. KRAFT, ESQ.
LOMURRO, DAVISON, EASTMAN & MUNOZ, P.A.
100 WILLOW BROOK ROAD, BUILDING 1
FREEHOLD, NJ 07728

WITNESSETH:

WHEREAS, the City of Long Branch is desirous of retaining John L. Kraft, Esq. of the law firm Lomurro, Davison, Eastman & Munoz, P.A. to provide legal services as bond counsel accordance with the proposal attached hereto.

NOW, THEREFORE, in consideration for the execution of this Agreement and the supplying of services hereunder, the parties agree as follows:

This contract is awarded as an open ended contract. During the term of the contract, a purchase order will be issued, with a not to exceed value, to authorize work for specific matters. *No services are to be provided by the contractor prior to the date of the purchase order; further, the contractor may not provide services, nor bill for services, for costs exceeding the amount of the purchase order.* It is the Contractor's responsibility to notify the City prior to providing services if there are insufficient funds left
on a specific purchase order, and the insure that an amended or new purchase order has been issued by the City.

Contractor is required to bill for services on a monthly basis, at hourly rates as specified in its proposal. *Bills are to be forwarded to the City Finance Office no later that twenty-one calendar days after the end of the calendar month, or the date of the contractor's monthly billing cycle.*

1. John L. Kraft, Esq. of the law firm Lomurro, Davison, Eastman & Munoz to provide services.

2. Contractor will submit billing and vouchers on a monthly basis.

3. The term of said contract shall be July 1, 2008 through June 30, 2009.

4. The City will not honor any of your invoices that exceed the contract amount unless, prior to you or your firm exceeding that amount, you notify the City so that an amendment to your contract can be considered by the Mayor and Council, and, if appropriate, approved.

Due to the number of professional service contractors the City deals with, it is important for each contractor to recognize the limit of their contract, and advise the City Administrator and City Attorney of the need to continue service with an amendment to the contract.

The Administrator and Attorney would then make the appropriate recommendation to the City Council based upon the facts and circumstances, as they exist at that time.

However, please understand that this application must be made **in advance of providing any services** the cost of which would exceed the contract amount, and only after having an amended contract approved by resolution of City Council will you be authorized to proceed.

5. The Contractor certifies it complies with Affirmative Action regulations. During the performance of this contract, the contractor agrees as follows:

The contractor or subcontractor, where applicable will not discriminate against any employee or applicant for employment because of age, race, creed, color, national origin, ancestry, marital status, affectional or sexual orientation, or sex. Except with respect to affectional or sexual orientation, the contractor will take affirmative action to ensure that such applicants are recruited and employed, and that employees are treated during employment, without regard to their age, race, creed, color, national origin, ancestry, marital status, affectional or sexual orientation or sex. Such action shall include, but not be limited to the following: employment, upgrading, demotion, or transfer; recruitment or recruitment advertising; layoff or termination; rates of pay or other forms of compensation; and selection for training including apprenticeship. The contractor agrees to post in conspicuous places, available to employees and applicants for employment, notices to be provided by the Public Agency Compliance Officer, setting forth provisions of this non-discrimination clause.

The contractor or subcontractor, where applicable, will, in all solicitations or advertisements for employees placed by or on behalf of the contractor, state that all qualified applicants will receive consideration for employment without

regard to their age, race, creed, color, national origin, ancestry, marital status, affectional or sexual orientation or sex.

The contractor or subcontractor, where applicable, will send to each labor union or representative of workers with which it has a collective bargaining agreement or other contract or understanding, a notice, to be provided by the agency contracting officer, advising the labor union or workers' representative of the contractor's commitments under this act and shall post copies of the notice in conspicuous places available to employees and applicants for employment.

The contractor or subcontractor, where applicable, agrees to comply with any regulations promulgated by the Treasurer pursuant to NJSA 10:5-36 et. seq. as amended and supplemented from time to time and the Americans with Disabilities Act.

The contractor or subcontractor agrees to make good faith efforts to employ minority and women workers consistent with the applicable county employment goals established in accordance with NJAC 17:275.2, or a binding determination of the applicable county employment goals determined by the Division, pursuant to NJSA 17:275.2.

The contractor or subcontractor agrees to inform in writing its appropriate recruitment agencies including, but not limited to, employment agencies, placement bureaus, colleges, universities, labor unions, that it does not discriminate on the basis of age, creed, color, national origin, ancestry, marital status, affectional or sexual orientation or sex, and that it will discontinue the use of any recruitment agency which engages in direct or indirect discriminatory practices. The contractor or subcontractor agrees to revise any of its testing procedures, if necessary, to assure that all personnel testing conforms with the principals of job related testing, as established by the statutes and court decisions of the state of New Jersey and as established by applicable federal law and applicable federal court decisions.

In conforming with the applicable employment goals, the contractor or subcontractor agrees to review all procedures relating to transfer, upgrading, down grading and lay off to ensure that all such actions are taken without regard to age, creed, color, national origin, ancestry, marital status, sex, affectional or sexual orientation, and conform with the applicable employment goals, consistent with the statutes and court decisions of the state of New Jersey, and applicable federal law and applicable Federal court decisions.

The contractor and its subcontract shall furnish such reports or other documents to the Division of contract compliance and EEO as maybe requested by the office from time to time in order to carry out the purposes of these regulations, and public agency shall furnish information as may be requested by

the Division of Contract Compliance and EEO for conducting a compliance investigation pursuant to subchapter 10 of the administrative code of NJAC 17:27.

A contractor, subcontractor or supplier who fails to provide proof of business registration or provides false business registration information shall be liable to a penalty or $25 for each day of violation, not to exceed $50,000 for each business registration not properly provided or maintained under a contract with the contracting agency. Information of the law and its requirements is available by calling (609)292-9292.

6. The City shall publish notice of said award of this agreement in the legal ad section of its official newspaper, and shall have on file for public inspection a copy of this contract and authorizing resolution as prescribed by law.

7. "The contractor, in executing this contract document, acknowledges that it complies with City Ordinance # 18-05, annexed hereto, and New Jersey ELEC laws, rules and regulations, and has not given any political contribution that would bar it from being awarded this contract."

9. Contractor is advised that the responsibility to file an annual disclosure statement on political contributions with the New Jersey Election Enforcement commission pursuant to N.J.S.A. 19:44A-20.3 (P.L. 205, c, 271, s.3), if the contractor receives contracts in excess of $50,000 from public Entities in a calendar year. It is the contractor's responsibility to determine if filing is necessary. Additional information on this requirement is available from ELEC at 888-313-3532 or at www.elec.state.nj.us.

10. This Contract shall be binding upon the City has caused this instrument to be signed by **ADAM SCHNEIDER, MAYOR** attested by **IRENE A. JOLINE, CLERK** and the Municipal Seal to be hereunto affixed and the **CONTRACTOR** hereunto set their hand and seals, or caused these presents to be signed by their proper corporate officers and their proper corporate seal to be hereto affixed, the day and year first above mentioned.

CITY OF LONG BRANCH

by:_____
Adam Schneider, Mayor

Attested by:

Date:_____

_____
Irene A. Joline, RMC
City Clerk

CONTRACTOR

By:_____

Title:_____

Attested by:

_____

Dated:_____

LOMURRO, DAVISON, EASTMAN & MUÑOZ, P.A.

ATTORNEYS AT LAW
MONMOUTH EXECUTIVE CENTER
100 WILLOW BROOK ROAD
BUILDING 1
FREEHOLD, NEW JERSEY 07728

(732) 462-7170
TELEFAX (732) 462-8955

E-Mail Address:
JKRAFT@LOMURROLAW.COM

Website:
WWW.LOMURROLAW.COM

DIRECT DIAL (732) 410-2327

DONALD M. LOMURRO ✦⁾
DUANE O. DAVISON
EDWARD C. EASTMAN, JR. ✦
ROBERT F. MUÑOZ
ROBERT L. HEUGLE, JR. ✦
JAMES M. McGOVERN, JR.
PETER H. LEDERMAN
BETTINA E. MUNSON ◇
JAMES A. PAONE, II
THOMAS M. COMER ✦
ROBERT S. BONNEY, JR. ⁾⁾
ANDREA WHITE O'BRIEN ◇
JOHN L. KRAFT+

COUNSEL
GARY P. McLEAN
MICHAEL J. FASANO
SIMON L. KAUFMAN
ALTON D. KENNEY
PETER V. KOENIG
H. FRANK CARPENTIER

✦CERTIFIED BY THE SUPREME COURT OF N.J. AS A:
✦ CIVIL TRIAL ATTORNEY
⁾⁾ CRIMINAL TRIAL ATTORNEY
◇ MATRIMONIAL LAW ATTORNEY

+FOUNDING FELLOW OF THE AMERICAN COLLEGE OF BOND COUNSEL

HEIDI K. HOFFMAN
TRACY A. ARMSTRONG
LOREN ROSENBERG LIGHTMAN
DANIEL M. SANTARSIERO✦
CARRIE A. LUMI

JAIME R. ACKERMAN
JONATHAN H. LOMURRO
ALLISON C. WILLIAMS
CHRISTINA D. HARDMAN-O'NEAL
ANDREW T. McDONALD
MICHELE CRUPI
AMY L. MILLER
BLAKE R. LAURENCE
PERIANGILLY BELTRÉ
LORYN M. LAWSON

OF COUNSEL
JOSEPH M. CLAYTON, JR.
STEPHEN C. CARTON
MICHAEL D. SCHOTTLAND ✦
JULES S. LITTMAN
JOHN KAYE
PHILIP G. AUERBACH✦

June 26, 2008

Irene A. Joline
City Clerk
City of Long Branch
344 Broadway
Long Branch, NJ 07740

Re: **QUALIFICATIONS SUBMISSION TO RESPONSE TO REQUEST FOR PROPOSAL FOR PROFESSIONAL SERVICES – 2008/2009 – BOND COUNSEL**

Dear Ms. Joline:

The following is a response to the Request for Proposal to provide Bond Counsel services to the City of Long Branch for 2008/2009 from:

Lomurro, Davison, Eastman & Munoz, P.A.
Monmouth Executive Center
100 Willow Brook Road, Building 1
Freehold, NJ 07728-2879

Specific responses to the items set forth in the City of Long Branch's Request for Proposal are as follows:

1. Contact Information.

Lomurro, Davison, Eastman & Munoz, P.A.
100 Willow Brook Road, Building 1
Freehold, NJ 07728
732.462.7170 - phone
732.462-8955– fax

*The Certified designation by the New Jersey Supreme Court is limited to attorneys who have demonstrated 1) substantial involvement in trial matters in Superior Court, 2) an unblemished reputation as attested to by judges and attorneys, and 3) substantial knowledge and continuing legal education shown by passing a special written examination on trial practice.

2. The firm was created in March, 1988. At the present time, the firm consists of 13 partners and over 25 Counsel, Associates and Of Counsel. Legal assistants and clerical staff consist of about 60.

3. The firm consists of five principals: Donald M. Lomurro, Esq., Duane O. Davison, Esq., Edward C. Eastman, Jr., Esq., Robert F. Munoz, Esq., and Robert L. Heugle, Jr., Esq. All five attorneys are located at the Freehold, New Jersey location.

4. John L. Kraft will be the attorney assigned to work on all Bond Counsel matters for the City of Long Branch. His experience, education and qualifications are summarized in his resume attached hereto as Exhibit A.

5. Attached hereto as Exhibit B is a list of references. Please feel free to contact any of the persons listed.

6. John L. Kraft currently represents the City in all Bond Counsel matters and has done so for many years.

7. Please see Exhibit B for a partial list of municipalities that the firm represents.

8. Attached as Exhibit C is a proposed fee agreement. This is the same fee agreement that the firm currently has in force with the City of Long Branch.

9. See Exhibit C.

10. Attached as Exhibit D is a copy of the current Certificate of Insurance.

Mr. Kraft prepared a chapter for a recently published new book, "The Handbook of Municipal Bonds". The chapter is entitled, "The Role of Bond Counsel in Public Agency Financing". It demonstrates the depth of his knowledge of municipal bond law, which will serve the best interest of the City. A copy of the chapter is attached hereto as Exhibit E.

Respectfully Submitted,

John L. Kraft

JLK:ds
Enclosures

LOMURRO, DAVISON, EASTMAN & MUÑOZ, P.A.

ATTORNEYS AT LAW
MONMOUTH EXECUTIVE CENTER
100 WILLOW BROOK ROAD
BUILDING 1
FREEHOLD, NEW JERSEY 07728

(732) 462-7170
TELEFAX (732) 462-8955

E-Mail Address:
JKRAFT@LOMURROLAW.COM

Website:
WWW.LOMURROLAW.COM

DIRECT DIAL (732) 410-2327

DONALD M. LOMURRO ✦◊
DUANE O. DAVISON
EDWARD C. EASTMAN, JR. ✦
ROBERT F. MUÑOZ
ROBERT L. HEUGLE, JR. ✦
JAMES M. McGOVERN, JR.
PETER H. LEDERMAN
BETTINA E. MUNSON ◊
JAMES A. PAONE, II
THOMAS M. COMER ✦
ROBERT S. BONNEY, JR. ◊
ANDREA WHITE O'BRIEN ◊
JOHN L. KRAFT+

COUNSEL
GARY P. McLEAN
MICHAEL J. FASANO
SIMON L. KAUFMAN
ALTON D. KENNEY
PETER V. KOENIG
H. FRANK CARPENTIER

*CERTIFIED BY THE SUPREME COURT OF N.J. AS A:
✦ CIVIL TRIAL ATTORNEY
◊ CRIMINAL TRIAL ATTORNEY
◊ MATRIMONIAL LAW ATTORNEY

+FOUNDING FELLOW OF THE AMERICAN COLLEGE OF BOND COUNSEL

HEIDI K. HOFFMAN
TRACY A. ARMSTRONG
LOREN ROSENBERG LIGHTMAN
DANIEL M. SANTARSIERO✦
CARRIE A. LUMI

JAIME R. ACKERMAN
JONATHAN H. LOMURRO
ALLISON C. WILLIAMS
CHRISTINA D. HARDMAN-O'NEAL
ANDREW T. McDONALD
MICHELE CRUPI
AMY L. MILLER
BLAKE R. LAURENCE
PERIANGILLY BELTRÉ
LORYN M. LAWSON

OF COUNSEL
JOSEPH M. CLAYTON, JR.
STEPHEN C. CARTON
MICHAEL D. SCHOTTLAND ✦
JULES S. LITTMAN
JOHN KAYE
PHILIP G. AUERBACH✦

RESUME OF JOHN L. KRAFT

John L. Kraft established the first nationally recognized Bond Counsel practice in the State of New Jersey in 1971. Mr. Kraft began his legal career at a Newark law firm in 1964. In 1967, he joined one of the three New York City firms that then handled most of New Jersey's bond work. In 1969, he moved to the second of the three New York Bond Counsel firms that handled most of the New Jersey municipal bond work. In 1970 he was appointed Associate Counsel to Governor William T. Cahill. As part of the Cahill Administration, he was responsible for all bonding matters, including those relating to the New Jersey Sports and Exposition Authority and the New Jersey Mortgage Finance Agency. In 1971, Mr. Kraft left the Governor's staff to establish Kraft & Hughes, the first New Jersey based Bond Counsel practice.

Mr. Kraft's prior training and experience in two of the three major New York Bond Counsel firms enabled him to achieve what many said was impossible. The tradition of the "New York Legal Opinion" was thought to be an insurmountable obstacle to any New Jersey lawyer succeeding as Bond Counsel. However, he was successful and achieved the distinction of being New Jersey's first Bond Counsel.

For 30 years Mr. Kraft practiced under the law firm names of Kraft & Hughes, Kraft & McManimon and Lowenstein Sandler. In 2001 he established John L. Kraft, Esq., L.L.C. where he continued his Bond Counsel practice. He became a partner at Lomurro, Davison, Eastman and Muñoz in September 2007 to head up the firm's newly created Public Finance Department.

Mr. Kraft has served as Bond Counsel for 18 of the 21 counties and hundreds of municipalities, school districts and authorities in New Jersey. He was the first New Jersey Bond Counsel for the State of New Jersey, the New Jersey Economic Development Authority and the New Jersey Turnpike Authority. In 1985, the New Jersey Turnpike Authority issue he approved as Bond Counsel was for two billion dollars, at that time the largest bond sale ever in the nation.

Mr. Kraft is known for his devotion to providing cost effective and highly competent Bond Counsel services, regardless of the sizes of the issue. His experience and creativity have enabled him to solve many difficult problems. He also prides himself on his reputation for promptly responding to his clients' needs.

*The Certified designation by the New Jersey Supreme Court is limited to attorneys who have demonstrated 1) substantial involvement in trial matters in Superior Court, 2) an unblemished reputation as attested to by judges and attorneys, and 3) substantial knowledge and continuing legal education shown by passing a special written examination on trial practice.

Throughout his career as Bond Counsel, Mr. Kraft has been a leader and an active force in the New Jersey Bar, the National Bond Counsel Bar and the New Jersey community. These varied activities have enhanced his ability to serve his State, county, municipal, school district and authority clients. Mr. Kraft is a member of the New Jersey State Bar Association and he served as a Trustee and Chair of the Local Government Law Section. He is a Fellow of the American Bar Foundation. He has served as Editor-in-Chief of the Editorial Board of the New Jersey Lawyer newspaper and as a member of the Editorial Board of the New Jersey Law Journal. In 1976, Mr. Kraft helped to establish the Bond Attorneys Workshop, an annual educational program for Bond Attorneys held in Chicago. In 1980 he served as Workshop Chairman. He also is a member and former Director of the National Association of Bond Lawyers. In 1995 he was a Founding Fellow of the American College of Bond Counsel, serving for 3 years as its first President. In 2002, the College established the Annual Kraft Lecture Series to recognize Mr. Kraft's contributions to Public Finance Law. Mr. Kraft serves as Associate Legal Counsel to the New Jersey State League of Municipalities and belongs to the New Jersey County Finance Officers Association, the New Jersey Conference of Mayors, the Government Finance Officers Association of New Jersey and the Association of Environmental Authorities. Mr. Kraft was selected twice as the Outstanding Person in New Jersey Public Finance by the County Finance Officers Association.

In 2001, the Richard J. Hughes Foundation presented Mr. Kraft with the Richard J. Hughes Award. In 2004, he received the Fred G. Stickel Award from the New Jersey Institute of Local Government Attorneys. In 2007, Mr. Kraft received a Lifetime Achievement Award from The Sales Improvement Consultants Inc. The New Jersey Assembly adopted a resolution commending Mr. Kraft on receiving the Lifetime Achievement Award and on being the Garden State's first bond attorney. He was named the 2008 Irishman of the Year by the Friendly Sons of St. Patrick of the Jersey Shore.

Mr. Kraft has been a prolific writer and speaker throughout his career as Bond Counsel. He has spoken at conferences of the Government Finance Officers Association of the United States and Canada, the Bond Buyer, the Bond Market Association, the New Jersey Government Finance Officers' Association, the New Jersey Association of Counties, the New Jersey State League of Municipalities, the Association of Environmental Authorities and the New Jersey Conference of Mayors. In addition, he is a regular instructor at Rutgers for a course on bonding for municipal attorneys. For the last 25 years he has conducted an annual workshop for a small group of top Bond Counsel from all parts of the United States. Over the years, Mr. Kraft also has presented many seminars directly to elected and appointed officials throughout the State.

Mr. Kraft authored the chapter entitled, "The Role of Bond Counsel in Public Agency Financing" that was published in the 2008 publication, "The Handbook of Municipal Bonds, edited by Sylvan G. Feldstein and Frank J. Fabozzi.

Mr. Kraft's life and education reflect his commitment to the law and the State of New Jersey. He is a life-long resident of New Jersey. He graduated Georgetown University, *cum laude*, in 1958. This was followed by three years in the U.S. Air Force as a Lieutenant. He then attended Yale Law School, where he was an Editor of the Yale Law Journal and was enrolled in the Order of the Coif. He graduated in the top 10% of his class in 1964. Mr. Kraft was admitted to the Bars of New Jersey, New York, Florida and the District of Columbia. Mr. Kraft and his wife, Joy, have six children and seven grandchildren. Now empty nesters, the Krafts reside in Waretown, Ocean County, New Jersey.

REFERENCES

The Buena Municipal Utilities Authority
Reference: Gary Labo, Secretary
P.O. Box 696
Minotola, NJ 08341
Telephone: (856) 697-1784

Florham Park, Borough of
Reference: John Conway, Administrator
111 Ridgedale Avenue
Florham Park, NJ 07932
Telephone: (973) 410-5300

Freehold, Township of
Reference: Thomas E. Antus, Administrator
1 Municipal Plaza
Freehold, NJ 07728
Telephone: (732) 294-2000

Howell, Township of
Reference: Jeff L. Filiatreault, Chief Financial Officer
251 Preventorium Road
P.O. Box 580
Howell, NJ 07731
Telephone: (732) 938-4500

Long Branch Sewerage Authority
Reference: Joseph A. Martone, Executive Director
P.O. Box 720
Long Branch, NJ 07740
Telephone: (732) 222-0500

Millburn Board of Education
Reference: Robert Zeglarski, Board Secretary
434 Millburn Avenue
Millburn, NJ 07041
Telephone: (973) 564-7156

Millstone, Township of
Reference: James V. Pickering, Administrator
470 Stage Coach Road
Millstone Twp., NJ 08510
Telephone: (732) 446-4249

Monmouth Beach, Borough of
Reference: James Fuller, Chief Financial Officer
22 Beach Road
Monmouth Beach, NJ 07750
Telephone: (732) 229-2204

Morris, Township of
Reference: Fred J. Rossi, Administrator
50 Woodland Avenue
Convent Station, NJ 07961
Telephone: (973) 326-7361

The North Hudson Sewerage Authority
Reference: Fred Pocci, Executive Director
1600 Adams Street
Hoboken, NJ 07030
Telephone: (973) 963-4685

Peapack and Gladstone, Borough of
Reference: Margaret Gould, Clerk
One School Street
Peapack, NJ 07977
Telephone: (908) 234-2250

Sussex, County of
Reference: Bernard Re, County Treasurer
One Spring Street
Newton, NJ 07860
Telephone: (973) 579-0300

Tenafly, Borough of
Reference: Karen S. Palermo, Chief Financial Officer
100 Riveredge Road
Tenafly, NJ 07670
Telephone: (201) 568-6100

Weehawken, Township of
Reference: Mayor Richard Turner
400 Park Avenue
Weehawken, NJ 07087
Telephone: (201) 319-6005

ACORD™ CERTIFICATE OF LIABILITY INSURANCE

DATE (MM/DD/YYYY) 2/5/2008

PRODUCER (732)919-0200 FAX: (732)919-0500
Patterson-McKenna Agency, Inc.
1715 Hwy. 34
P.O. Box 1429
Wall NJ 07719

THIS CERTIFICATE IS ISSUED AS A MATTER OF INFORMATION ONLY AND CONFERS NO RIGHTS UPON THE CERTIFICATE HOLDER. THIS CERTIFICATE DOES NOT AMEND, EXTEND OR ALTER THE COVERAGE AFFORDED BY THE POLICIES BELOW.

INSURED
Lomurro, Davison, Eastman & Munoz, PA
Monmouth Executive Ctr.
100 Willowbrook Rd.
Freehold NJ 07728

INSURERS AFFORDING COVERAGE	NAIC #
INSURER A: Executive Risk Indemnity	
INSURER B:	
INSURER C:	
INSURER D:	
INSURER E:	

COVERAGES

THE POLICIES OF INSURANCE LISTED BELOW HAVE BEEN ISSUED TO THE INSURED NAMED ABOVE FOR THE POLICY PERIOD INDICATED. NOTWITHSTANDING ANY REQUIREMENT, TERM OR CONDITION OF ANY CONTRACT OR OTHER DOCUMENT WITH RESPECT TO WHICH THIS CERTIFICATE MAY BE ISSUED OR MAY PERTAIN, THE INSURANCE AFFORDED BY THE POLICIES DESCRIBED HEREIN IS SUBJECT TO ALL THE TERMS, EXCLUSIONS AND CONDITIONS OF SUCH POLICIES. AGGREGATE LIMITS SHOWN MAY HAVE BEEN REDUCED BY PAID CLAIMS.

INSR LTR	ADD'L INSRD	TYPE OF INSURANCE	POLICY NUMBER	POLICY EFFECTIVE DATE (MM/DD/YY)	POLICY EXPIRATION DATE (MM/DD/YY)	LIMITS	
		GENERAL LIABILITY				EACH OCCURRENCE	$
		COMMERCIAL GENERAL LIABILITY				DAMAGE TO RENTED PREMISES (Ea occurrence)	$
		CLAIMS MADE / OCCUR				MED EXP (Any one person)	$
						PERSONAL & ADV INJURY	$
						GENERAL AGGREGATE	$
		GEN'L AGGREGATE LIMIT APPLIES PER: POLICY / PRO-JECT / LOC				PRODUCTS - COMP/OP AGG	$
		AUTOMOBILE LIABILITY				COMBINED SINGLE LIMIT (Ea accident)	$
		ANY AUTO					
		ALL OWNED AUTOS				BODILY INJURY (Per person)	$
		SCHEDULED AUTOS					
		HIRED AUTOS				BODILY INJURY (Per accident)	$
		NON-OWNED AUTOS					
						PROPERTY DAMAGE (Per accident)	$
		GARAGE LIABILITY				AUTO ONLY - EA ACCIDENT	$
		ANY AUTO				OTHER THAN AUTO ONLY: EA ACC	$
						AGG	$
		EXCESS/UMBRELLA LIABILITY				EACH OCCURRENCE	$
		OCCUR / CLAIMS MADE				AGGREGATE	$
							$
		DEDUCTIBLE					$
		RETENTION $					$
		WORKERS COMPENSATION AND EMPLOYERS' LIABILITY				WC STATUTORY LIMITS / OTHER	
		ANY PROPRIETOR/PARTNER/EXECUTIVE OFFICER/MEMBER EXCLUDED?				E.L. EACH ACCIDENT	$
		If yes, describe under SPECIAL PROVISIONS below				E.L. DISEASE - EA EMPLOYEE	$
						E.L. DISEASE - POLICY LIMIT	$
A		OTHER Lawyers Professional	6800-35373	1/28/2008	1/28/2009	$9,000,000 Each & $100,000 Retention	Ever Claim

DESCRIPTION OF OPERATIONS/LOCATIONS/VEHICLES/EXCLUSIONS ADDED BY ENDORSEMENT/SPECIAL PROVISIONS

CERTIFICATE HOLDER

Sample for Insured

CANCELLATION

SHOULD ANY OF THE ABOVE DESCRIBED POLICIES BE CANCELLED BEFORE THE EXPIRATION DATE THEREOF, THE ISSUING INSURER WILL ENDEAVOR TO MAIL 30 DAYS WRITTEN NOTICE TO THE CERTIFICATE HOLDER NAMED TO THE LEFT, BUT FAILURE TO DO SO SHALL IMPOSE NO OBLIGATION OR LIABILITY OF ANY KIND UPON THE INSURER, ITS AGENTS OR REPRESENTATIVES.

AUTHORIZED REPRESENTATIVE
Robert McKenna/NLB

© ACORD CORPORATION 1988

CHAPTER 5

The Role of Bond Counsel in Public Agency Financing

John L. Kraft, Esq.
Partner
Lomurro, Davison, Eastman & Munoz, P.A.

Virtually all bonds issued by states and political subdivisions are accompanied by an approving legal opinion of a nationally recognized bond counsel. This is a law firm with an established reputation in the investment community for experience and reliability in municipal finance. The bond counsel's approving legal opinion is the investor's assurance as to the validity, security and tax-exempt status of the bonds. It states that the bonds are valid and binding obligations of the issuer enforceable in accordance with their terms and, when appropriate, that the interest income on the bonds is exempt from federal income taxes.

The assurances provided by the legal opinion stay with the bonds as long as they remain outstanding, passing from one owner to another. The owner of an outstanding municipal bond cannot expect to sell the bond unless he delivers with it a copy of the bond counsel's approving legal opinion.

This chapter will explain the role of bond counsel in public agency financing by exploring the history of bond counsel, the purpose of bond counsel in the twenty-first century, the legal issues addressed by bond counsel and evolving issues in public finance law that will be addressed by bond counsel.

HISTORY OF BOND COUNSEL

The role of bond counsel can best be understood from an historical perspective. In the 1800s a number of states and local governments issued bonds to fund capital improvements, often related to the development of railroad facilities. The ability of the issuer to pay the bonds depended upon the pros-

perity and the growing tax base that was expected to follow the development of the railroad industry. Unfortunately, prosperity was not universal, and a significant number of railroad bonds went into default. Bondholders brought suit in the local courts seeking to collect on the defaulted obligations. In order to avoid payment, the bond issuers asserted as defenses, technical defects in the procedures for the authorization and the issuance of the bonds. These technical defects were asserted to invalidate the bond issue and to relieve the issuer of the obligation to pay. The frequency of default through the use of these technical defenses in lawsuits caused investors to reject municipal bonds as investments.

In order to restore investor confidence, underwriters developed the practice of hiring an attorney of their choice, independent from the issuer, to review the legal procedures followed by the governmental unit in authorizing and issuing the bonds. The sale of the bonds to the underwriter was not final without the approving opinion of the independent attorney, who came to be known as the *bond counsel*. If the bond counsel found the slightest defect in the actions taken by the issuer, he (or she) would not render the opinion and the bond sale was aborted. Over time, the municipal issuers came to retain the bond counsel to guide them through the authorization process, so that the proper procedures would be followed and the issuer could be assured of obtaining the approving legal opinion at the time of the sale. Even though engaged by the issuer, the bond counsel retains its independence today, recognizing that investors will rely on its approving legal opinion when purchasing bonds.

The number of law firms providing these specialized services has grown over the years. The great majority of all bonds issued throughout the country still are approved by a small number of bond counsel firms. For many years *The Bond Buyer's Municipal Marketplace* (known as the "Red Book") has contained a section entitled "Municipal Bond Attorneys." The publisher disclaims any responsibility for the accuracy of the list, and a number of listed firms actually do little or no bond counsel work. However, all firms that do provide bond counsel services on a routine basis are listed in the Red Book.

REVIEW OF BOND COUNSEL OPINION

The present-day role of the bond counsel can be examined by focusing on a typical approving legal opinion. The comments in the following paragraphs will correspond to the numbers superimposed on the sample approving legal opinion set forth as Exhibit 5.1.

EXHIBIT 5.1 Sample of Legal Opinion

JOHN L. KRAFT, ESQ., L.L.C. (1)

John L. Kraft, Esq

Fellow of the
American College of
Bond Counsel

Township Committee of the
Township of Morris, in the
County of Morris, New Jersey (2)

Dear Committee Members

I have examined a record of proceedings relating to the issuance of $12,707,000 General Improvement Bonds of the Township of Morris, a municipal corporation of the State of New Jersey, situate in the County of Morris (the "Bonds"). The Bonds are dated November 15, 2006, (3) mature on November 15 in the principal amounts and bear interest at the rates per annum payable May 15, 2007 and semiannually thereafter on the fifteenth days of May and November in each year until maturity as described in the following schedule:

Year	Principal Amount	Interest Rate
2007	$ 515,000	3.50%
2008	520,000	3.50%
2009	520,000	3.50%
2010	520,000	3.50%
2011	770,000	3.50%
2012	900,000	3.75%
2013	925,000	3.75%
2014	950,000	3.75%
2015	955,000	3.75%
2016	1,000,000	3.75%
2017	1,025,000	4.00%
2018	1,030,000	4.00%
2019	1,030,000	4.00%
2020	1,030,000	4.00%
2021	1,017,000	4.00%

The Bonds are issued in the form of one Bond for each maturity, being fifteen in number, and are numbered GI-1 to GI-15, inclusive, in order of maturity. The are issued pursuant to the Local Bond Law of the State of New Jersey and a resolution of the Township Committee adopted October 18, 2006 and entitled, "Resolution Providing for the Combination of Certain Issues of (4) General Improvement Bonds of the Township of Morris, in the County of Morris, New Jersey (5) into a Single Issue of Bonds Aggregating $12,707,000 in Principal Amount" in all respects duly

Phone 973 992 4421 70 South Orange Avenue, Livingston, NJ 07039 jkraft@kraftbonds.com Fax 973 992 3366

EXHIBIT 5.1 Continued

Township Committee of the
Township of Morris, in the
County of Morris, New Jersey
Page 2

approved and the various bond ordinances referred to therein, each in all respects duly approved and published as required by law

The Bonds are subject to redemption prior to their stated maturities. The Bonds will be registered in the name of Cede & Co., as nominee of The Depository Trust Company, New York, New York, which will act as Securities Depository

In my opinion, except insofar as the enforcement thereof may be limited by any applicable bankruptcy, moratorium or similar laws relating to the enforcement of creditors' rights, the Bonds are valid and legally binding obligations of the Township of Morris and the Township has (6)
the power and is obligated to levy ad valorem taxes upon all the taxable real property within the (7)
Township for the payment of the Bonds and the interest thereon without limitation as to rate or amount.

The Township has covenanted to comply with any continuing requirements that may be necessary to preserve the tax exempt status of the Bonds under the Internal Revenue Code of 1986, as amended (the "Code"). In the event that the Township continuously complies with its (8)
covenant, it is my opinion that interest on the Bonds is not includable in gross income for federal income tax purposes under the current law

In my opinion, the Bonds are not "private activity bonds" as defined in the Code and interest on the Bonds is not an item of tax preference for purposes of computing the federal alternative minimum tax imposed on individuals. Interest on the Bonds held by a corporate taxpayer is included in the relevant income computation for calculation of the federal alternative minimum tax as a result of the inclusion of interest on the Bonds in "adjusted current earnings." I express no opinion regarding other federal tax consequences arising with respect to the Bonds.

Further, in my opinion, interest on the Bonds and any gain on the sale of the Bonds are not includable as gross income under the New Jersey Gross Income Tax Act.

Very truly yours,

1. *Bond counsel firm.* The law firm rendering the opinion must be one recognized as a bond counsel firm. This reputation is established over years of involvement in the area of municipal finance.
2. *Heading.* Most approving legal opinions are addressed to the bond counsel's client, the issuer of the obligations. However, the bond counsel knows that investors will rely on its opinion throughout the life of the bonds. Investors have a right to expect that the bond counsel will be independent in rendering this opinion. The opinion will be rendered only after bond counsel has conducted a thorough review of all aspects of the bond authorization and issuance process and is certain that the opinion is correct. This is referred to as an unqualified opinion.

   If there are any factors present that might bring into question any aspect of the opinion, the bond counsel has the duty to put investors on notice by making reference to those factors and expressing the opinion either that such factors are without merit and do not affect the bond counsel's conclusion (a *no-merit opinion*) or that such factors do raise

some questions as to which the bond counsel cannot render an unqualified opinion (a *qualified opinion*). For example, if a lawsuit is started to enjoin the issuance of the bonds alleging some noncompliance with law, the bond counsel will analyze the situation. If the bond counsel is satisfied that there is no legal basis for the suit, it will issue a no-merit opinion. If there is any arguable basis to the claims, the bond counsel may issue a qualified opinion that expresses no opinion as to the outcome of the lawsuit. A qualified opinion usually will prevent the public sale of the bonds, since investors do not wish to gamble on a favorable resolution of legal uncertainties. A no-merit opinion can be the basis for a publicly offered issue if the original investors are willing to accept the bond counsel's conclusion that any questions raised will be resolved in favor of the issuer. Recognizing the great reliance placed upon the legal opinion, the bond counsel is very conservative in assessing whether a no-merit opinion should be issued.
3. *Description of bonds.* The bond counsel advises the issuer as to the form of the bonds. It should be noted that after July 1, 1983, all new-issue municipal bonds have to be in registered form in order to qualify the interest for federal tax exemption. The bond counsel also supervises the preparation, execution, and delivery of the bonds to the purchaser.
4. *Record of proceedings.* The basis for the bond counsel's opinion as to the validity and the security of the bonds is the record of the proceedings followed by the issuer to authorize the issuance of the bonds. As indicated above, the bond counsel's role originally was limited to an after-the-fact review of the proceedings. Sometimes, mistakes in law and procedure were uncovered that required the cancellation of the bond sale. The current practice is to have the bond counsel render advice and guidance to the issuer throughout the authorization process. The bond counsel then oversees the preparation of the record of proceedings to document that everything is in order. The record of proceedings usually includes proof of the proper establishment of the issuer as a political subdivision. There have been instances of bonds being "issued" by nonexistent governmental agencies to defraud investors. This is virtually impossible today, when a well-known bond counsel approves the bonds to be sold. The record of proceedings also includes proof of the observance of all technical procedures for the authorization and the issuance of the obligations, such as the proper adoption of resolutions and ordinances in accordance with the requirements of law. The record of proceedings may also contain proof as to the validity and the enforceability of the security for the payment of the bonds, such as a mortgage or a security interest in personal property.

5. *Statement of authority*. Typically, reference is made in the opinion to the authority for the issuance of the bonds. In our example, the resolution referred to in the opinion was prepared by the bond counsel just prior to the bond sale. The ordinances referred to in the resolution were prepared by the bond counsel over a period of several years preceding the sale and constitute not only the authorization to sell the bonds but also the authorization to undertake the improvements financed by the bond issue.
6. *Validity*. The basic opinion of the bond counsel is that the bonds are valid and legally binding obligations of the issuer that must be paid when due. The obligation to pay, however, is subject to bankruptcy laws. The United States Constitution provides that the federal government has the supreme jurisdiction over bankruptcies, and the Bankruptcy Code has specific provisions governing municipal bankruptcies.
7. *Security*. The opinion discussed here applies to a general obligation bond issue. No specific stream of revenues is pledged to pay the bonds. The issuer promises to levy sufficient taxes "without limitation as to rate or amount" to pay the bonds in accordance with their terms. The bond counsel must be sure that the issuer has this general taxing power and that the issuer has invoked its use properly for the entire time the bonds will remain outstanding.

   The other major category of bonds is revenue bonds. These bonds are issued by public agencies that may or may not have the power to levy taxes. The source of payment of the bonds is the revenue derived from the project financed by the bonds or by some other specific source of revenue. When revenue bonds are backed up by a pledge to use the taxing power of the issuer if the pledged revenues are insufficient to pay the bonds, they are referred to as *double-barreled bonds*.
8. *Tax exemption*. In 1913, the United States Constitution was amended to authorize Congress to levy and collect income taxes. This created an additional responsibility for the bond counsel, namely to assure that interest on the bonds will be exempt from federal income taxation. The Internal Revenue Code always has provided that gross income of taxpayers does not include interest on the obligations of a state, a territory, or a possession of the United States or any political subdivision thereof or of the District of Columbia. Accordingly, the bond counsel renders the opinion that the holders of municipal bonds are entitled to this exemption, when appropriate. Because the interest on most municipal bonds is exempt from taxation, they can be sold at lower interest rates than securities bearing taxable interest, such as U.S. Treasury obligations.

FURTHER TAX DEVELOPMENTS

In 1968, Congress amended the Internal Revenue Code (the Code) to eliminate tax-exempt status for industrial development bonds (now called *private activity bonds*). The industrial development bond exception prohibits the use of tax-exempt bonds for projects which benefit private parties where the bonds are secured by the revenues of the project being financed. Subsequent amendments to the Code, numerous changes in the tax regulations, as well as pronouncements of the Internal Revenue Service in the form of revenue rulings and private letter rulings, make it increasingly complicated for the bond counsel to render an opinion that the interest on bond issues is exempt from federal income taxes. In 1969 the Internal Revenue Code again was amended to provide that arbitrage bonds would not bear tax-exempt interest. Arbitrage bonds are bonds that are issued for the purpose of reinvesting the bond proceeds in taxable investments for the purpose of making a profit. No one challenged these laws as being unconstitutional when they were adopted.

From 1913 to 1988, many believed that the basis for tax exemption was found in the U.S. Constitution. In 1988, the U.S. Supreme Court rejected this position and held that tax exemption is not a Constitutional right. Rather, it is a privilege granted by the federal government which can be withdrawn at any time. To date, the federal government has not eliminated tax exemption for municipal bonds, except as stated above.

Many states impose income taxes of their own. Currently, interest income on municipal bonds is subject to the state income taxes, except for bonds issued by the particular state and its political subdivisions. Bond counsel also expresses an opinion relating to tax exemption within the state where the bonds are issued, but this state tax exemption is under attack before the U.S. Supreme Court as described in the next section.

DISCLOSURE AND SECURITIES LAWS

In 1975, the City of New York defaulted on its general obligation notes because of its inability to pay the principal and interest on time. Criticisms were leveled against city officials, the underwriters of the obligations and other professionals advising the city, including the bond counsel. The Securities and Exchange Commission undertook a study to determine the causes of the default and the parties, if any, who might be responsible. In 1977, an SEC staff report criticized the role that the bond counsel played in the New York City fiscal crisis, charging that bond counsel did not critically analyze the financial information provided by the city. The SEC said that bond counsel should

have conducted its own investigation when put on notice of circumstances that called into question matters basic to the issuance of its opinion. While the role of the bond counsel traditionally has been to do legal work and not to provide financial analysis, this report and the circumstances surrounding the default suggest that bond counsel has increased responsibilities in the area of financial disclosure, and bond counsel must evaluate carefully the legal standards to which it and its client, the municipal issuer, will be held.

In response to the New York fiscal crisis, the Securities Exchange Act of 1934 was amended in 1975 to regulate municipal securities professionals, that is, the brokers and the dealers involved in buying and selling municipal securities. Municipal issuers specifically were excluded from such regulation. However, municipal obligations are sold by the brokers and the dealers who are subject to this regulation. The bond counsel must be familiar with disclosure requirements and the rules of the Securities and Exchange Commission in order to advise the municipal issuer. Moreover, municipal governments have always been held liable under the antifraud provisions of the Securities Exchange Act of 1934. As this area of law develops through court decisions, changes in legislation and the practices of the trade, bond counsel must keep informed of these changes and must keep its client in conformity with acceptable practices.

RECENT DEVELOPMENTS

We conclude this chapter with a summary of the continuing development of the law of public finance from the nineteenth to the twenty-first centuries. The law continues to evolve even as this chapter is prepared for publication. Bond Counsel, individually and through the National Association of Bond Counsel, participate in this evolution. These developments include the following:

1. *Federal securities law.* The current Chairman of the SEC has proposed sweeping changes of the federal securities laws, including repeal of the "Tower Amendment." The Tower Amendment was part of the Securities Acts Amendments of 1975, which also created the Municipal Securities Rulemaking Board (MSRB) to regulate municipal securities dealers. The Tower Amendment prohibits direct or indirect regulation of municipal securities issuers. Repeal of the Tower Amendment could lead to presale registration requirements for municipal bonds and other onerous regulations that would greatly increase the issuance costs for municipal bond issuers.

2. *State tax exemptions for bonds issued by a state and its political subdivisions.* As indicated above, the current practice of most states that impose state income taxes is to exempt from taxation interest on the bonds issued by the state and its political subdivisions. Interest on the bonds issued by other states and subdivisions is subject to the state income tax. New York and New Jersey are two examples of this practice. This tax preference is currently under challenge before the U.S. Supreme Court as being violative of the U.S. Constitution. A decision of the Court could come at any time.
3. *New accounting rules.* The Government Accounting Standards Board (GASB) has promulgated a new rule requiring governmental units to calculate and include in their financial statements, future liabilities called Other Post Employment Benefits ("OPEB"), principally retiree health benefits. The numbers are huge—New Jersey's potential liability is estimated by some to exceed $70 billion. This new GASB rule has created great controversy. The Government Finance Officer's Association has criticized GASB. Some have called for eliminating GASB altogether. Bond Counsel must engage in the controversy and then advise its clients on how to deal with this issue in the future.

The complexity and variety of public finance issues will continue to grow in the future. Bond counsel must address and solve them for the benefit of their clients and the investors in municipal bonds who rely on bond counsel to minimize legal risks from the municipal bond marketplace.

CITY OF LONG BRANCH
DOCUMENT SUBMISSION CHECKLIST

REQUIRED		READ, SIGNED & SUBMITTED
Yes	PROPOSAL AS REQUIRED IN RFQ	☑
Yes	STOCKHOLDER DISCLOSURE CERTIFICATION	☑
Yes	NON-COLLUSION AFFIDAVIT	☑
Yes	AFFIRMATIVE ACTION QUESTIONAIRE	☑

		REVIEWED
Yes	MANDATORY AFFIRMATIVE ACTION LANGUAGE	☑
Yes	AMERICANS WITH DISABLILITIES ACT OF 1990	☑
Yes	N. J. BUSINESS REGISTRATION LANGUAGE	☑
Yes	LONG BRANCH PAY TO PLAY ORDINANCE	☑

STOCKHOLDER DISCLOSURE CERTIFICATION

If bidder is a sole proprietorship, check here _____
And do not complete this statement.

The UNDERSIGNED, as bidder, in accordance with P.L. 1977, Chapter 33, of the State of New Jersey, declares and submits this Statement of Ownership.

Bidder is a Corporation (X) Partnership ( )

X I certify that the list below contains the names and home addresses of all stockholders holding 10% or more of the issued and outstanding stock of the undersigned. (Use additional sheets in this format if necessary.)

____ I certify that no one stockholder owns 10% or more of the issued and outstanding stock of the undersigned.

Stockholder/Partner

Name Donald M. Lomurro, Esq.
Home Address 365 E. Freehold Rd.
Freehold, NJ 07728

Name Duane O. Davison, Esq.
Home Address 49 Silvers Road
Freehold, NJ 07728

Name Edward C. Eastman, Jr., Esq.
Home Address 157 Hockhockson Rd.
Colts Neck, NJ 07722

Name Robert F. Munoz, Esq.
Home Address 1 Walnut Hill Lane
Freehold, NJ 07728

Name Robert L. Heugle, Jr., Esq.
Home Address 8 Bryce Road
Holmdel, NJ 07733

Name _____
Home Address _____

(If a corporation or partnership is shown as an owner of 10% or more stock, you must attach a Stockholder Disclosure form for that corporation/partnership.)

THIS FORM MUST BE INCLUDED WITH BID SUBMISSION.

Subscribed and sworn
Before me this day
June 26, 2008
Dina M. Statuto
Notary Public
My commission expires:

DINA M. STATUTO
Notary Public of New Jersey
Commission Expires 8/2/2011

John L. Kraft
(Signature of Officer/Owner)

John L. Kraft, Asst. Vice President
(Name and Title)

(CORPORATE SEAL)

NON-COLLUSION AFFIDAVIT

STATE OF NEW JERSEY
COUNTY OF MONMOUTH

I, John L. Kraft residing in 40 Deal Lane, Waretown
(name of municipality)

in the County of Ocean and State of New Jersey of full age,

being duly sworn according to law on my oath dispose and say that:

I, am Assistant Vice President of the firm of Lomurro, Davison, Eastman & Munoz, P.A.,
(title or position) (name of firm)

the bidder making this Proposal for the bid proposal entitled Bond Counsel
(title of bid proposal)
_____, and that I executed the said proposal with full authority to do so,

that said bidder has not, directly or indirectly entered into any agreement, participated in any collusion, or otherwise taken any action in restraint of free, competitive bidding in connection with the above named project; and that all statements contained in said proposal and in this affidavit are true and correct, and made with full knowledge that the **City of Long Branch** relies upon the truth of the statements contained in said Proposal, and in the statements contained in this affidavit, in awarding the contract for the said project.

I further warrant that no person or selling agency has been employed or retained to solicit or secure such contract upon an agreement or understanding for a commission, percentage, brokerage, or contingent fee, except bona fide employees or bona fide established commercial or selling agencies maintained by Lomurro, Davison, Eastman & Munoz, P.A.
(name of firm)

John L Kraft
(signature of affiant)

Subscribed and sworn to
before me this day
June 26, 2008

Dina M. Statuto
(signature of notary)

My Commission expires:

DINA M. STATUTO
Notary Public of New Jersey
Commission Expires 8/2/2011

REQUIRED EVIDENCE
AFFIRMATIVE ACTION REGULATION
P.L. 1975, C. 127 (N.J.A.C. 17:27)

If awarded a contract, all procurement and service contractors will be required to comply with the requirements of P.L. 1975, c. 127, (N.J.A.C. 17:27). Within seven (7) days after receipt of the notification of intent to award the contract or receipt of the contract, whichever is sooner, the contractor should present one of the following to the Purchasing Agent.

1. A photocopy of a valid letter from the U.S. Department of Labor that the contractor has an existing federally-approved or sanctioned Affirmative Action Plan (good for one year from the date of the letter).

OR

2. A photocopy of approved Certificate of Employee Information Report from the State of New Jersey.

OR

3. An Affirmative Action Employee Information Report (Form AA302).

OR

4. All successful construction contractors must submit, within three days (3) of the signing of the contract, an Initial Project Manning Report (AA201) for any contract award that meets or exceeds the Public Agency bidding threshold (available upon request).

NO FIRM MAY BE ISSUED A CONTRACT UNLESS IT COMPLIES WITH THE AFFIRMATIVE ACTION REGULATIONS OF P.L. 1975, C. 127.

The following questions must be answered by all bidders:

1. Do you have a federally-approved or sanctioned Affirmative Action Program?

___Yes X No If yes, please submit copy of such approval.

2. Do you have a Certificate of Employee Information Report Approval?

X Yes ___No If yes, please submit copy of such certificate.

The undersigned contractor certifies that he is aware of the commitment to comply with the requirements of P.L. 1975, c. 127, and agrees to furnish the required documentation pursuant to law.

COMPANY: Lomurro, Davison, Eastman & Munoz, P.A.

SIGNATURE: John L Kraft

TITLE: Assistant Vice President

NOTE: A CONTRACTOR'S BID MUST BE REJECTED AS NON-RESPONSIVE IF A CONTRACTOR FAILS TO COMPLY WITH REQUIREMENTS OF P.L.1975, C. 127, WITHIN THE REQUIRED TIME FRAME.

Certification 25884

CERTIFICATE OF EMPLOYEE INFORMATION REPORT

RENEWAL

This is to certify that the contractor listed below has submitted an Employee Information Report pursuant to N.J.A.C. 17:27-1.1 et seq. and the State Treasurer has approved said report. This approval will remain in effect for the period of 15-DEC-2005 15-DEC-2012

LOMURRO, DAVISON, EASTMAN & MUNOZ, P.A.
100 WILLOWBROOK RD., BLDG. 1
FREEHOLD NJ 07728

State Treasurer

EXHIBIT A
MANDATORY EQUAL EMPLOYMENT OPPORTUNITY LANGUAGE
N.J.S.A. 10:5-31 et seq. (P.L. 1975, C. 127)
N.J.A.C. 17:27
GOODS, PROFESSIONAL SERVICE AND GENERAL SERVICE CONTRACTS

During the performance of this contract, the contractor agrees as follows:

The contractor or subcontractor, where applicable, will not discriminate against any employee or applicant for employment because of age, race, creed, color, national origin, ancestry, marital status, affectional or sexual orientation, gender identity or expression, disability nationality or sex. Except with respect to affectional or sexual orientation and gender identity or expression, the contractor will take affirmative action to ensure that such applicants are recruited and employed, and that employees are treated during employment, without regard to their age, race, creed, color, national origin, ancestry, marital status, affectional or sexual orientation, gender identity or expression, disability, nationality or sex. Such action shall include, but not be limited to the following: employment, upgrading, demotion, or transfer; recruitment or recruitment advertising; layoff or termination; rates of pay or other forms of compensation; and selection for training, including apprenticeship. The contractor agrees to post in conspicuous places, available to employees and applicants for employment, notices to be provided by the Public Agency Compliance Officer setting forth provisions of this nondiscrimination clause.

The contractor or subcontractor, where applicable will, in all solicitations or advertisements for employees placed by or on behalf of the contractor, state that all qualified applicants will receive consideration for employment without regard to age, race, creed, color, national origin, ancestry, marital status, affectional or sexual orientation, gender identity or expression, disability, nationality or sex.

The contractor or subcontractor, where applicable, will send to each labor union or representative or workers with which it has a collective bargaining agreement or other contract or understanding, a notice, to be provided by the agency contracting officer advising the labor union or workers' representative of the contractor's commitments under this act and shall post copies of the notice in conspicuous places available to employees and applicants for employment.

The contractor or subcontractor, where applicable, agrees to comply with any regulations promulgated by the Treasurer pursuant to N.J.S.A. 10:5-31 et seq., as amended and supplemented from time to time and the Americans with Disabilities Act.

The contractor or subcontractor agrees to make good faith efforts to employ minority and women workers consistent with the applicable county employment goals established in accordance with N.J.A.C. 17:27-5.2, or a binding determination of the applicable county employment goals determined by the Division, pursuant to N.J.A.C. 17:27-5.2.

The contractor or subcontractor agrees to inform in writing its appropriate recruitment agencies including, but not limited to, employment agencies, placement bureaus, colleges, universities, labor unions, that it does not discriminate on the basis of age, creed, color, national origin, ancestry, marital status, affectional or sexual orientation, gender identity or expression, disability, nationality or sex, and that it will discontinue the use of any recruitment agency which engages in direct or indirect discriminatory practices.

The contractor or subcontractor agrees to revise any of its testing procedures, if necessary, to assure that all personnel testing conforms with the principles of job-related testing, as established by the statutes and court decisions of the State of New Jersey and as established by applicable Federal law and applicable federal court decisions.

In conforming with the applicable employment goals, the contractor or subcontractor agrees to review all procedures relating to transfer, upgrading, downgrading and layoff to ensure that all such actions are taken without regard to age, creed, color, national origin, ancestry, marital status, affectional or sexual orientation, gender identity or expression, disability, nationality or sex, consistent with the statutes and court decisions of the State of New Jersey, and applicable Federal law and applicable Federal court decisions.

The contractor shall submit to the public agency, after notification of award but prior to execution of a goods and services contract, one of the following three documents:

Letter of Federal Affirmative Action Plan Approval
Certificate of Employee Information Report
Employee Information Report Form AA302

The contractor and its subcontractors shall furnish such reports or other documents to the Div. of Contract Compliances & EEO as may be requested by the office from time to time in order to carry out the purposes of these regulations, and public agencies shall furnish such information as may be requested by the Div. of Contract Compliance & EEO for conducting a compliance investigation pursuant to **Subchapter 10 of the Administrative Code at N.J.A.C. 17:27.**

AMERICANS WITH DISABILITIES ACT OF 1990

Equal Opportunity for Individuals with Disability

The CONTRACTOR and the OWNER do hereby agree that the provisions of Title II of the American With Disabilities Act of 1990 (the "ACT") (42 U.S.C. S12101 et seq.), which prohibits discrimination on the basis of disability by public entities in all services, programs, and activities provided or made available by public entities, and the rules and regulations promulgated pursuant thereunto, are made a part of this contract. In providing any aid, benefit, or service on behalf of the OWNER pursuant to this contract, the CONTRACTOR agrees that the performance shall be in strict compliance with the Act. In the event that the Contractor, its agents, servants, employees, or subcontractors violate or are alleged to have violated the Act during the performance of this contract, the CONTRACTOR shall defend the OWNER in any action or administrative proceeding commenced pursuant to this Act. The Contractor shall indemnify, protect, and save harmless the OWNER, its agents, servants, and employees from and against any and all suits, claims, losses, demands, or damages, of whatever kind or nature arising out of or claimed to arise out of the alleged violation. The CONTRACTOR shall, at its own expense, appear, defend, and pay any and all charges for legal services and any and all costs and other expenses arising from such action or administrative proceeding or incurred in connection therewith. In any and all complaints brought pursuant to the OWNER grievance procedure, the CONTRACTOR agrees to abide by any decision of the OWNER which is rendered pursuant to said grievance procedure. If any action or administrative proceeding results in an award of damages against the OWNER or if the
OWNER incurs any expense to cure a violation of the ADA which has been brought pursuant to its grievance procedure, the CONTRACTOR shall satisfy and discharge the same at its own expense.

The OWNER shall, as soon as practicable after a claim has been made against it, give written notice thereof to the CONTRACTOR along with full and complete particulars of the claim. If any action or administrative proceedings is brought against the OWNER or any of its agents, servants, and employees, the OWNER shall expeditiously forward or have forwarded to the CONTRACTOR every demand, complaint, notice, summons, pleading, or other process received by the OWNER or its representatives.

It is expressly agreed and understood that any approval by the OWNER of the services provided by the CONTRACTOR pursuant to this contract will not relieve the CONTRACTOR of the obligation to comply with the Act and to defend, indemnify, protect, and save harmless the OWNER pursuant to this paragraph.

It is further agreed and understood that the OWNER assumes no obligation to indemnify or save harmless the CONTRACTOR, its agents, servants, employees and subcontractors for any claim which may arise out of their performance of this Agreement. Furthermore, the CONTRACTOR expressly understands and agrees that the provisions of this indemnification clause shall in no way limit the CONTRACTOR'S obligations assumed in this Agreement, nor shall they be construed to relieve the CONTRACTOR from any liability, nor preclude the OWNER from taking any other actions available to it under any other provisions of the Agreement or otherwise at law.

CONTRACT LANGUAGE FOR
BUSINESS REGISTRATION CERTIFICATE COMPLAINCE

For Procurement (Goods and Services) Contracts
(including Purchase Orders)

N.J.S.A. 52:32-44 imposes the following requirements on contractors and all subcontractors that **knowingly** provide goods or perform services for a contractor fulfilling this contract: 1) the contractor shall provide written notice to its subcontractors to submit proof of business registration to the contractor; 2) prior to receipt of final payment from the contracting agency, a contractor must submit to the contracting agency an accurate list of all subcontractors or attest that none was used; 3) during the term of this contract, the contractor and its affiliates shall collect and remit, and shall notify all subcontractors and their affiliates that they must collect and remit to the Director, New Jersey Division of Taxation, the use tax due pursuant to the Sales and Use Tax Act, (N.J.S.A. 54:32B-1 et seq.) on all sales of tangible personal property delivered into this State.

A contractor, subcontractor or supplier who fails to provide proof of business registration or provides false business registration information shall be liable to a penalty or $25 for each day of violation, not to exceed $50,000 for each business registration not properly provided or maintained under a contract with the contracting agency. Information of the law and its requirements is available by calling (609)292-9292.

For Construction Contracts

N.J.S.A. 52:32-44 imposes the following requirements on contractors and all subcontractors that **knowingly** provide goods or perform services for a contractor fulfilling this contract:

1) The contractor shall provide written notice to its subcontractors and suppliers to submit proof of business registration to the contractor;
2) Subcontractors through all tiers of a project must provide written notice to their subcontractors and suppliers to submit proof of business registration and subcontractors shall collect proofs of business registration and maintain them on file;
3) Prior to receipt of final payment from a contracting agency, a contractor must submit to the contracting agency an accurate list of all subcontractors and suppliers or attest that none was used; and,
4) During the term of this contract, the contractor and its affiliates shall collect and remit, and shall notify all subcontractors and their affiliates that they must collect and remit, to the Director, New Jersey Division of Taxation, the use tax due pursuant to the Sales and Use Tax Act, (N.J.S.A. 52:32B-1 et seq.) on all sales of tangible personal property delivered into this State.

A contractor, subcontractor or supplier who fails to provide proof of business registration or provides false business registration information shall be liable to a penalty or $25 for each day of violation, not to exceed $50,000 for each business registration not properly provided or maintained under a contract with the contracting agency. Information of the law and its requirements is available by calling (609)292-9292.

STATE OF NEW JERSEY
BUSINESS REGISTRATION CERTIFICATE

Taxpayer Name:	LOMURRO, DAVISON, EASTMAN & MUNOZ, P.A.
Trade Name:	
Address:	100 WILLOWBROOK ROAD, BLDG #1 FREEHOLD, NJ 07728-2879
Certificate Number:	0076088
Date of Issuance:	May 10, 2006

For Office Use Only:

20060510162933733

Long Branch, New Jersey
ORDINANCE NO. 18-05

AN ORDINANCE TO AMEND AND SUPPLEMENT ORDINANCE NO. 13-05, KNOWN AS "AN ORDINANCE REQUIRING PUBLIC CONTRATING REFORM, AND AMENDING AND SUPPLEMENTING THE 'REVISED GENERAL ORDINANCES OF THE CITY OF LONG BRANCH, NEW JERSEY' ACCORDINGLY," AS ADOPTED ON MAY 10, 2005.

WHEREAS, on May 10, 2005, the City of Long Branch adopted Ordinance No. 13-05, known as "An Ordinance Requiring Public Contracting Reform, and Amending and Supplementing the 'Revised General Ordinances of the City of Long Branch, New Jersey' Accordingly" (the "Ordinance"); and

WHEREAS, the Ordinance places certain limitations upon the annual amount(s) of contributions that professionals may make to the political campaigns of the local elected officials who are ultimately responsible for the award of discretionary no-bid contracts for municipal professional services; and

WHEREAS, the intention of the Ordinance is to ensure trust in the process of local government, if not the quality or cost of services received, and to minimize any perceptions or concerns on the part of the public that discretionary no-bid contracts for municipal professional services are being awarded to professionals as a reward for having made substantial political contributions, or that the award of such contracts was influenced, even to a minor degree, by the payment of such contributions; and

WHEREAS, it is hereby found and declared that the practice of "wheeling," whereby one political organization channels campaign donations to another political organization with the intention to conceal or misrepresent the source of the contribution, may be utilized as a loophole to circumvent the proscriptions contained within the Ordinance; and

WHEREAS, the City Council of the City of Long Branch, in a continuing effort to ensure the integrity of the award of public professional service contracts, has therefore determined that it would be in the best interests of the City, and its residents, to amend the Ordinance in an attempt to curb the practice known as "wheeling;" and

WHEREAS, the City Council of the City of Long Branch also wishes to take this opportunity to clarify the "arbitration" provision referenced in Section 3(c) thereof; and

WHEREAS, the City Council of the City of Long Branch finds that it is in the best interest of the City and its residents to require that a contribution of more

than fifty dollars ($50.00) received by a candidate be reported in the manner set forth by the laws and regulations of the State of New Jersey.

NOW, THEREFORE, BE AND IT IS HEREBY ORDAINED, that Ordinance No. 13-05, known as "An Ordinance Requiring Public Contracting Reform, and Amending and Supplementing the 'Revised General Ordinances of the City of Long Branch, New Jersey' Accordingly," which was adopted on May 10, 2005, is hereby amended and supplemented as follows:

SECTION 1

Prohibition on Awarding Professional Contracts to Certain Contributors

(a) The City of Long Branch shall not enter into an agreement for professional services with any individual and/or professional business entity if that individual or entity has solicited or made any contribution of money or pledge of a contribution including in-kind contributions, to a campaign of any City of Long Branch candidate for Council or Mayor, in excess of the threshold specified in subsection (d) of this Section within one calendar year immediately preceding the date of the contract or agreement unless cured pursuant to Section 3. The prohibition set forth in this Paragraph shall also apply to any solicitation or contribution of money or pledge of a contribution including in-kind contributions made during the applicable time period to any City of Long Branch or Monmouth County Party Committee, or to any political action committee (PAC) that is organized for the primary purpose of promoting or supporting City of Long Branch candidates for Council or Mayor, so long as the solicitation or contribution was made with the intention on the part of the contributor to conceal or misrepresent the source of the contribution.

(b) No professional business entity which enters into negotiations for, or agrees to, any contact or agreement with the municipality or any department or agency thereof or any of its independent authorities for the rendition of professional services shall knowingly solicit or make any contribution of money, or pledge of a contribution, including in-kind contributions, to any City of Long Branch candidate or holder of public office having ultimate responsibility for the award of the contract, in excess of the amount set forth herein. This Section is to include any and all professionals who provide political contributions to any candidate for an office whether or not that candidate is presently in office or seeks office. The prohibition set forth in this Paragraph shall also apply to any solicitation or contribution of money or pledge of a contribution including in-kind contributions to any City of Long Branch or Monmouth County Party Committee, or to any political action committee (PAC) that is organized for the primary purpose of promoting or supporting City of Long Branch candidates for Council or Mayor, so long as the solicitation or contribution was made with the intention on the part of the contributor to conceal or misrepresent the source of the contribution.

(c) For purpose of this ordinance, a "professional business entity" seeking a public contract means an individual including the individual's spouse, if

any, and any child living at home; person; firm; corporation, professional corporation; partnership; organization; or association. The definition of a business entity includes all principals who own ten percent (10%) or more of the equity in the corporation or business trust, partners, and officers in the aggregate employed by the entity as well as any subsidiaries directly controlled by the business entity.

(d) Any individual meeting the definition of "professional business entity" under this section may annually contribute a maximum of five hundred dollars ($500.00) per candidate for Mayor and/or Council Member on an annual basis whether or not that individual has a professional services contract in place or not to the maximum extent of three thousand dollars ($3,000) per annum per business entity. This section shall apply to any presently sitting Councilperson and/or the Mayor of the City of Long Branch and shall also apply to any individual who seeks to run for the office of Council person and/or Mayor of the City of Long Branch.

(i) Any individual that owns less than ten (10%) percent of a professional business entity which contracts with the City of Long Branch shall not be treated as a part of that entity.

(e) For purposes of this section, the office that is considered to have ultimate responsibility for the award of the contract shall be:

(1) The City of Long Branch, if the contract requires approval or appropriation from the Council.

(2) The Mayor of the City of Long Branch, if the contract requires approval of the Mayor, or if a public officer who is responsible for the award of a contract is appointed by the Mayor.

SECTION 2
Contributions Made Prior to Effective Date

No contribution of money or any other thing of value, including in-kind contributions, made by a professional business entity to any municipal candidate for Mayor or Council, or to any municipal or county party committee, or to any political action committee (PAC) that is organized for the primary purpose of promoting or supporting City of Long Branch candidates for Council or Mayor, shall be deemed a violation of this section, nor shall an agreement for property, good or services, of any kind whatsoever, be disqualified thereby, if that contribution was made by the professional business entity prior to the effective date of this section.

SECTION 3
Penalty

(a) All City of Long Branch professional service agreements shall provide that it shall be a breach of the terms of the government contract for a professional business entity as defined in Section 1(c) to violate Section 1(b) or to knowingly conceal or misrepresent contributions given or received, or to make or solicit contributions through intermediaries for the purpose of concealing or misrepresenting the source of the contribution.

(b) Any professional business entity as defined in Section 1(c) and (d) who knowingly fails to reveal a contribution made in violation of this Act, or who knowingly makes or solicits contributions through intermediaries for the purpose of concealing or misrepresenting the source of the contribution, shall be subjected to a fine in the sum of $2,500 so far as the first offense and for any second offense, shall be disqualified from eligibility for future City of Long Branch contracts for a period of four calendar years from the date of the violation.

(c) There shall be no breach of contract in the event a contribution is questioned and as a result of the questioning of the contribution the individual and/or business entity who makes the contribution requests that the contribution be returned by the campaign committee, the candidate or the political action committee to whom such contribution was made. In the event of any disputes as to whether or not a campaign contribution is proper the matter shall be submitted to arbitration before a retired Judge of the Superior Court of New Jersey.

SECTION 4
Reporting Requirements

Any contribution received by a candidate committee, joint candidates committee, or political committee, during an election fund report period of more than fifty dollars ($50.00) or aggregate contributions received by such a committee in an election from a contributor totaling more than fifty dollars ($50.00) during such a report period shall be reported by providing the information set forth in N.J.A.C. 19:25-10.2

SECTION 5
Severability

If any provision of this law, or the application of any such provision to any person or circumstances, shall be held invalid, the remainder of this law to the extent it can be given effect, or the application of such provision to persons or circumstances other than those to which it is held invalid, shall not be affected thereby, and to this extent the provisions of this law are severable.

SECTION 6
Effective Date

This Ordinance shall take effect immediately upon final passage and publication in accordance with the law.

SECTION 7
Repealer

All other Ordinance or parts of Ordinances inconsistent herewith are hereby repealed to the extent of such inconsistency.

Introduced: 6/14/05
Adopted: 6/28/05

CITY OF LONG BRANCH, MUNICIPAL BUILDING, 344 BROADWAY, LONG BRANCH, N.J. 07740 (732) 571-5645

Howard H. Woolley, Jr
Business Administrator

TO: Council Members

FROM: Howard H. Woolley, Jr.
Business Administrator

RE: Contract for Bond Counsel Services

DATE: July 2, 2008

After examining the proposals submitted to the City of Long Branch for Bond Counsel Services, it is the recommendation of the Mayor and Business Administrator to have Lomurro, Davison, Eastman & Munoz, P.A. continue to provide services to the City of Long Branch. Their contract is from July 1, 2008 through June 30, 2009.

Based upon prior history, the City of Long Branch has determined that Lomurro, Davison, Eastman & Munoz, P.A. have the experience, expertise and resources to provide the services required by the City of Long Branch.

HHW:gb

R# 223-08

RESOLUTION AUTHORIZING CONTRACT FOR LOBBYING CONSULTANT SERVICES

WHEREAS, the City of Long Branch has the need to retain the services of a firm to provide lobbying services to aid the City in obtaining County, State, and Federal Grants, low interest loans, and provide lobbying activity in support of City ordinances and resolutions concerning general City welfare and redevelopment; and

WHEREAS, the City, through a Fair and Open Process, has advertised on its website the solicitation of proposals for said services (Fair & Open #013-08), received and opened in public on June 30, 2008, and proposals were received from:

Public Strategies Impact, LLC **$30,000 *Plus expenses**
(Proposal noted out of pocket allowance not to exceed $5,000)
Dilworth Paxson, LLP **$60,000 *Plus Expenses**
(Proposal noted fee as negotiable)

WHEREAS, Public Strategies Impact, LLC has the experience, expertise and resources to provide the services required by the City, has provided these services to the City for the past five years, and it is the recommendation of the Mayor and Business Administrator that it is in the best interest of the City to award a contract to this firm for services through June 30, 2009; and

WHEREAS, based upon prior history, the City has determined that it would be appropriate to reduce the out of pocket allowance to a not to exceed of $2,000, and Public Strategies Impact has agreed to same; and

WHEREAS, all contractors awarded professional service contracts are required to comply with City Ordinance #18-05, and execution of the contract documents, annexed hereto, will serve as acknowledgement by Public Strategies Impact, LLC that it complies with the Ordinance, and has not made any political contributions that would bar it from being awarded a contract with the City of Long Branch; and

WHEREAS, the Chief Financial Officer of the City of Long Branch has certified, in accordance with the Certification of Funds Form attached hereto, that funds are available for this contract in the **2007 Budget, Office of Mayor, Appropriation #8-01-011-586, in the amount of $17,000, with continuation of this contract contingent upon provision of additional funds in the 2009 budget.**

NOW, THEREFORE, BE IT RESOLVED that the City Council of the City of Long Branch hereby authorizes a contract with **Public Strategies Impact, LLC** for lobbying consultant services for the term of July 1, 2008 through June 30, 2009, in accordance with the contract document annexed hereto, **for an annual retainer of $30,000, and not to exceed amount for reimbursable expenses of $2,000, for a total contract amount not to exceed $32,000.**

BE IT FURTHER RESOLVED that the Mayor and Clerk are hereby authorized to execute any and all necessary document pursuant to said agreement.

CITY OF LONG BRANCH
OFFICE OF THE FINANCE DIRECTOR
344 BROADWAY
LONG BRANCH, NJ 07740

CERTIFICATION OF CHIEF FINANCIAL OFFICER

As the Chief Financial Officer of the City of Long Branch, I certify that funds are available for award of the following contracts/agreements:

ANNUAL CONTRACT FOR LOBBYING CONSULTANT SERVICES
July 1, 2008 – June 30, 2009

Said contract being made as follows:

PUBLIC STRATEGIES IMPACT, LLC **$32,000**

Said funds being available in the form of:

2008 BUDGET
OFFICE OF THE MAYOR
MISCELLANEOUS OTHER EXPENSE
APPRO #8-01-011-586 **$17,000***
***Continuation of this contract is contingent upon provision of adequate funds in the 2009 budget.**

Ronald J. Mehlhorn, Sr., C.P.A., R.M.A.
Finance Director, Chief Financial Officer

Date

AGREEMENT

THIS AGREEMENT MADE THIS DAY OF ,

BETWEEN: **CITY OF LONG BRANCH**
344 Broadway
Long Branch, NJ 07740

Hereinafter called the **CITY**

AND

PUBLIC STRATEGIES IMPACT, LLC
414 RIVER VIEW PLAZA
TRENTON, NJ 08611

WITNESSETH:

WHEREAS, the City of Long Branch is desirous of retaining Public Strategies Impact, LLC to provide lobbying consultant services in accordance with the proposal attached hereto, for an amount not to exceed $32,000.00; and

NOW, THEREFORE, in consideration for the execution of this Agreement and the supplying of services hereunder, the parties agree as follows:

1. The City of Long Branch hereby enters the within agreement for a sum not to exceed $32,000.00.

2. Public Strategies Impact, LLC agrees to provide services.

3. Contractor will submit billing and vouchers on a monthly basis.

4. The term of said contract shall be July 1, 2008 through June 30, 2009.

5. The City will not honor any of your invoices that exceed the contract amount unless, prior to you or your firm exceeding that amount, you notify the City so that an amendment to your contract can be considered by the Mayor and Council, and, if appropriate, approved.

Due to the number of professional service contractors the City deals with, it is important for each contractor to recognize the limit of their contract, and

advise the City Administrator and City Attorney of the need to continue service with an amendment to the contract.

The Administrator and Attorney would then make the appropriate recommendation to the City Council based upon the facts and circumstances, as they exist at that time.

However, please understand that this application must be made **in advance of providing any services** the cost of which would exceed the contract amount, and only after having an amended contract approved by resolution of City Council will you be authorized to proceed.

6. The Contractor certifies it complies with Affirmative Action regulations. During the performance of this contract, the contractor agrees as follows:

The contractor or subcontractor, where applicable will not discriminate against any employee or applicant for employment because of age, race, creed, color, national origin, ancestry, marital status, affectional or sexual orientation, or sex. Except with respect to affectional or sexual orientation, the contractor will take affirmative action to ensure that such applicants are recruited and employed, and that employees are treated during employment, without regard to their age, race, creed, color, national origin, ancestry, marital status, affectional or sexual orientation or sex. Such action shall include, but not be limited to the following: employment, upgrading, demotion, or transfer; recruitment or recruitment advertising; layoff or termination; rates of pay or other forms of compensation; and selection for training including apprenticeship. The contractor agrees to post in conspicuous places, available to employees and applicants for employment, notices to be provided by the Public Agency Compliance Officer, setting forth provisions of this non-discrimination clause.

The contractor or subcontractor, where applicable, will, in all solicitations or advertisements for employees placed by or on behalf of the contractor, state that all qualified applicants will receive consideration for employment without regard to their age, race, creed, color, national origin, ancestry, marital status, affectional or sexual orientation or sex.

The contractor or subcontractor, where applicable, will send to each labor union or representative of workers with which it has a collective bargaining agreement or other contract or understanding, a notice, to be provided by the agency contracting officer, advising the labor union or workers' representative of the contractor's commitments under this act and shall post copies of the notice in conspicuous places available to employees and applicants for employment.

The contractor or subcontractor, where applicable, agrees to comply with any regulations promulgated by the Treasurer pursuant to NJSA 10:5-36 et. seq. as amended and supplemented from time to time and the Americans with Disabilities Act.

The contractor or subcontractor agrees to make good faith efforts to employ minority and women workers consistent with the applicable county employment goals established in accordance with NJAC 17:275.2, or a binding determination of the applicable county employment goals determined by the Division, pursuant to NJSA 17:275.2.

The contractor or subcontractor agrees to inform in writing its appropriate recruitment agencies including, but not limited to, employment agencies, placement bureaus, colleges, universities, labor unions, that it does not discriminate on the basis of age, creed, color, national origin, ancestry, marital status, affectional or sexual orientation or sex, and that it will discontinue the use of any recruitment agency which engages in direct or indirect discriminatory practices. The contractor or subcontractor agrees to revise any of its testing procedures, if necessary, to assure that all personnel testing conforms with the principals of job related testing, as established by the statutes and court decisions of the state of New Jersey and as established by applicable federal law and applicable federal court decisions.

In conforming with the applicable employment goals, the contractor or subcontractor agrees to review all procedures relating to transfer, upgrading, down grading and lay off to ensure that all such actions are taken without regard to age, creed, color, national origin, ancestry, marital status, sex, affectional or sexual orientation, and conform with the applicable employment goals, consistent with the statutes and court decisions of the state of New Jersey, and applicable federal law and applicable Federal court decisions.

The contractor and its subcontract shall furnish such reports or other documents to the Division of contract compliance and EEO as maybe requested by the office from time to time in order to carry out the purposes of these regulations, and public agency shall furnish information as may be requested by the Division of Contract Compliance and EEO for conducting a compliance investigation pursuant to subchapter 10 of the administrative code of NJAC 17:27.

A contractor, subcontractor or supplier who fails to provide proof of business registration or provides false business registration information shall be liable to a penalty or $25 for each day of violation, not to exceed $50,000 for each business registration not properly provided or maintained under a contract with the contracting agency. Information of the law and its requirements is available by calling (609)292-9292.

7. The City shall publish notice of said award of this agreement in the legal ad section of its official newspaper, and shall have on file for public inspection a copy of this contract and authorizing resolution as prescribed by law.

8. "The contractor, in executing this contract document, acknowledges that it complies with City Ordinance # 18-05, annexed hereto, and New Jersey ELEC laws, rules and regulations, and has not given any political contribution that would bar it from being awarded this contract."

9. Contractor is advised that the responsibility to file an annual disclosure statement on political contributions with the New Jersey Election Enforcement commission pursuant to N.J.S.A. 19:44A-20.3 (P.L. 205, c, 271, s.3), if the contractor receives contracts in excess of $50,000 from public Entities in a calendar year. It is the contractor's responsibility to determine if filing is necessary. Additional information on this requirement is available from ELEC at 888-313-3532 or at www.elec.state.nj.us.

10. This Contract shall be binding upon the City has caused this instrument to be signed by **ADAM SCHNEIDER, MAYOR** attested by **IRENE A. JOLINE, CLERK** and the Municipal Seal to be hereunto affixed and the **CONTRACTOR** hereunto set their hand and seals, or caused these presents to be signed by their proper corporate officers and their proper corporate seal to be hereto affixed, the day and year first above mentioned.

CITY OF LONG BRANCH

by:_____
Adam Schneider, Mayor

Attested by:

Date:_____

_____
Irene A. Joline, RMC
City Clerk

CONTRACTOR
By:_____

Title:_____

Attested by:

_____

Dated:_____

MEMORANDUM

Roger A. Bodman
Harold L. Hodes

William J. Maer
Joseph A. Simonetta

Joseph DeSanctis
Tracie A. DeSarno
Matthew S. Halpin
Edward J. Mount

Josh Hodes
Patrick A. Stewart

To: City of Long Branch – Purchasing Office

From: Harold L. Hodes Matthew S. Halpin

Re: RFQ – Notice FO-013-08

Contract through June 30, 2009 for Lobbying Consultant Services

Date: June 30, 2008

Please find the enclosed packet of information in response to the City's RFQ for Lobbying Consultant Services. In addition to responding to the requested qualifications information, we have also included our company brochure.

We look forward to continuing our professional relationship with the City of Long Branch. Please contact us should you have any questions or would like any additional information.

PUBLIC STRATEGIES IMPACT LLC
Government • Public Affairs
Association Management

414 River View Plaza
Trenton, New Jersey
08611-3420

Phone: 609.393.7799
Fax: 609.393.9891

www.njlobbyist.com
www.publicstrategiesimpact.com

Request for Qualifications for Lobbying Consulting Services

1. Contact information:

Public Strategies Impact L.L.C.
414 River View Plaza
Trenton, NJ 08611
ph: 609-393-7799
fx: 609-393-9891
www.publicstrategiesimpact.com

2. Biography/History of firm:

Public Strategies Impact is the result of an affiliation in 1986 between Harold Hodes, former chief of staff to Governor Brendan Byrne, and Roger Bodman, former Commissioner of Labor and Transportation in Governor Thomas Kean's administration. Public Strategies Impact continues to evolve with an eye toward changes in public policy and government. The success of the firm is based on the unparalleled experience and expertise of our principals and staff, who have a thorough knowledge of the lawmaking process in New Jersey and of its participants. The combined experience of key PSI personnel in government, public and community relations, media, finance, business and the law enables us to respond to any challenge which may face our clients in the government or public affairs arena.

Fortune 500 companies, trade associations, and governmental entities come to Public Strategies Impact for advice, lobbying help and management because we set the standard for professional lobbying in New Jersey.

3. List of Partners and Associates (Bios Can be found in Attachments):

Roger A. Bodman, Senior Partner
Harold L. Hodes, Senior Partner
Joseph A. Simonetta, Partner
William J. Maer, Partner
Joseph DeSanctis, Partner
Tracie DeSarno, Partner
Edward J. Mount, Partner
Matthew S. Halpin, Partner
Robert A. Innocenzi, Senior Associate
Patrick Stewart, Associate
Josh Hodes, Associate

4. List of personnel assigned to Long Branch matters:

Harold Hodes
Roger Bodman
Matt Halpin
Robert Innocenzi

5. List of References from other Municipalities:

City of Newark
Michelle Thomas – Business Administrator
920 Broad Street - City Hall Room 306
Newark, NJ 07102
Ph: (973) 733-6574

Dumont Borough
Matt McHale - Mayor
50 Washington Ave.
Dumont, NJ 07628
Ph: (201) 460-3724

Cliffside Park Borough
Chris Diktas
596 Anderson Avenue
Cliffside Park, NJ 07010
Ph: (201) 943-8020

Fairview Borough
Paul Juliano
59 Anderson Avenue
Fairview, NJ 07022
Ph: (201) 943-3300

6. Prior experience in providing services to the City of Long Branch:

Public Strategies Impact has provided Government Affairs Services to the City of Long Branch since September 1, 2003. These services included lobbying on state government issues specific to the City of Long Branch as well as general issues that impact municipalities in the state. Additionally, we have consulted on various other matters including coordination with the NJDOT and the Office of Economic Growth on economic development initiatives, and numerous pieces of legislation currently under consideration by the State Legislature.

7. List of municipalities currently under contract with PSI:

City of Long Branch
City of Newark
Cliffside Park Borough
Dumont Borough

8. Fee Schedule by title for all Firm Members:

Public Strategies Impact proposes a minimum monthly retainer fee of $2,500. This retainer is based on the following fee schedule and formula:

PSI Professional Services Fee for Select Municipalities: $50.00 per hour
Estimated PSI Work Volume/ Effort Per Week: 12.5 hours per week
Estimated PSI Work Volume/ Effort Per Month: 50 hours per month

50 hours per month x $50.00 US per hour rate = $2,500.00 monthly retainer

Client shall pay the special rate of Two Thousand Five Hundred Dollars ($2,500.00 US) per month during the term of this Contract. The Total Contract shall not exceed Thirty-five Thousand Dollars ($35,000.00).

9. Schedule of any and all other fees routinely charged:

PSI shall be shall reimbursed for expenses incurred in the course of performance of Consultants' services. Mileage associated with use of private vehicles for performing services covered by this Contract will be reimbursed at the current IRS endorsed rate. Billing for fax, phone, courier services, tolls and parking will be submitted and will be priced at cost. Such reasonable expenses as travel, lodging, entertainment, and/or meals shall be pre-approved by the Client, which approval shall not be unreasonably withheld. Any individual expense in excess of One Hundred Fifty Dollars ($150.00) is also subject to prior approval. Consultants shall promptly provide Client with back up for any expenses requested by Client.

10. Copy of current Certificate of Insurance:

(See Attached)

STOCKHOLDER DISCLOSURE CERTIFICATION

If bidder is a sole proprietorship, check here _____
And do not complete this statement.

The UNDERSIGNED, as bidder, in accordance with P.L. 1977, Chapter 33, of the State of New Jersey, declares and submits this Statement of Ownership.

Bidder is a Corporation ( ) Partnership (XX)

XX I certify that the list below contains the names and home addresses of all stockholders holding 10% or more of the issued and outstanding stock of the undersigned. (Use additional sheets in this format if necessary.)

____ I certify that no one stockholder owns 10% or more of the issued and outstanding stock of the undersigned.

Stockholder/Partner

Name See attached list

Home Address_____

_____

Name_____

Home Address_____

_____

Name_____

Home Address_____

_____

Name_____

Home Address_____

_____

Name_____

Home Address_____

_____

Name_____

Home Address_____

_____

(If a corporation or partnership is shown as an owner of 10% or more stock, you must attach a Stockholder Disclosure form for that corporation/partnership.)

THIS FORM MUST BE INCLUDED WITH BID SUBMISSION.

Subscribed and sworn
Before me this day

JUNE 25, 2008

Karen Reiser
Notary Public
My commission expires:

(Signature of Officer/Owner)

Roger A. Bodman, Managing Partner
(Name and Title)

KAREN REISER
Notary Public of New Jersey
Commission Expires 5/24/2010

(CORPORATE SEAL)

Roger A. Bodman
Harold L. Hodes

William J. Maer
Joseph A. Simonetta

Joseph DeSanctis
Tracie A. DeSarno
Matthew S. Halpin
Edward J. Mount

Josh Hodes
Patrick A. Stewart

PUBLIC STRATEGIES IMPACT, L.L.C.
HOLDERS OF 10% OR MORE INTEREST

Name / Address	Date of Birth	Office Held	Ownership Interest
Roger A. Bodman 59 Harbourton Mt. Airy Rd. Lambertville, NJ 08530	4/15/52	Senior Partner	33 %
Harold L. Hodes 2 WaterView West End, NJ 07740	1/30/042	Senior Partner	33 %
Joseph A. Simonetta 1 Walton Drive New Hope, PA	1/21/54	Partner	12 %
William J. Maer 35 Wilson Avenue Lambertville, NJ 08530	1/22/67	Partner	12 %

June 25, 2008

PUBLIC STRATEGIES IMPACT L.L.C.
Government • Public Affairs
Association Management

414 River View Plaza
Trenton, New Jersey
08611-3420

Phone: 609.393.7799
Fax: 609.393.9891

www.njlobbyist.com
www.publicstrategiesimpact.com

NON-COLLUSION AFFIDAVIT

STATE OF NEW JERSEY
COUNTY OF _____

I, HAROLD L HODES residing in LONG BRANCH
(name of municipality)

in the County of MONMOUTH and State of NEW JERSEY of full age,

being duly sworn according to law on my oath dispose and say that:

I, am SENIOR PARTNER of the firm of PUBLIC STRATEGIES / IMPACT LLC
(title or position) (name of firm)

the bidder making this Proposal for the bid proposal entitled #FO-013-08
(title of bid proposal)
LOBBYING CONSULTING SVCS, and that I executed the said proposal with full authority to do so,

that said bidder has not, directly or indirectly entered into any agreement, participated in any collusion, or otherwise taken any action in restraint of free, competitive bidding in connection with the above named project; and that all statements contained in said proposal and in this affidavit are true and correct, and made with full knowledge that the **City of Long Branch** relies upon the truth of the statements contained in said Proposal, and in the statements contained in this affidavit, in awarding the contract for the said project.

I further warrant that no person or selling agency has been employed or retained to solicit or secure such contract upon an agreement or understanding for a commission, percentage, brokerage, or contingent fee, except bona fide employees or bona fide established commercial or selling agencies maintained by PUBLIC STRATEGIES / IMPACT, LLC
(name of firm)

Harold L Hodes
(signature of affiant)

Subscribed and sworn to
before me this day

JUNE 25 2008

Karen Reiser
(signature of notary)

My Commission expires:

KAREN REISER
Notary Public of New Jersey
Commission Expires 5/24/2010

REQUIRED EVIDENCE
AFFIRMATIVE ACTION REGULATION
P.L. 1975, C. 127 (N.J.A.C. 17:27)

If awarded a contract, all procurement and service contractors will be required to comply with the requirements of P.L. 1975, c. 127, (N.J.A.C. 17:27). Within seven (7) days after receipt of the notification of intent to award the contract or receipt of the contract, whichever is sooner, the contractor should present one of the following to the Purchasing Agent.

1. A photocopy of a valid letter from the U.S. Department of Labor that the contractor has an existing federally-approved or sanctioned Affirmative Action Plan (good for one year from the date of the letter).

OR

2. A photocopy of approved Certificate of Employee Information Report from the State of New Jersey.

OR

3. An Affirmative Action Employee Information Report (Form AA302).

OR

4. All successful construction contractors must submit, within three days (3) of the signing of the contract, an Initial Project Manning Report (AA201) for any contract award that meets or exceeds the Public Agency bidding threshold (available upon request).

NO FIRM MAY BE ISSUED A CONTRACT UNLESS IT COMPLIES WITH THE AFFIRMATIVE ACTION REGULATIONS OF P.L. 1975, C. 127.

The following questions must be answered by all bidders:

1. Do you have a federally-approved or sanctioned Affirmative Action Program?

___Yes _X_No If yes, please submit copy of such approval.

2. Do you have a Certificate of Employee Information Report Approval?

_X_Yes ___No If yes, please submit copy of such certificate.

The undersigned contractor certifies that he is aware of the commitment to comply with the requirements of P.L. 1975, c. 127, and agrees to furnish the required documentation pursuant to law.

COMPANY: PUBLIC STRATEGIES / IMPACT LLC

SIGNATURE: Harold L Hoover

TITLE: SR. PARTNER

NOTE: A CONTRACTOR'S BID MUST BE REJECTED AS NON-RESPONSIVE IF A CONTRACTOR FAILS TO COMPLY WITH REQUIREMENTS OF P.L.1975, C. 127, WITHIN THE REQUIRED TIME FRAME.

Certification 15742

CERTIFICATE OF EMPLOYEE INFORMATION REPORT

RENEWAL

This is to certify that the contractor listed below has submitted an Employee Information Report pursuant to N.J.A.C. 17:27-1.1 et. seq. and the State Treasurer has approved said report. This approval will remain in effect for the period of 15-DEC-2013 15-DEC-2014

PUBLIC STRATEGIES/IMPACT LLC
414 RIVER VIEW PLAZA
TRENTON NJ 08611-3420

State Treasurer

EXHIBIT A
MANDATORY EQUAL EMPLOYMENT OPPORTUNITY LANGUAGE
N.J.S.A. 10:5-31 et seq. (P.L. 1975, C. 127)
N.J.A.C. 17:27
GOODS, PROFESSIONAL SERVICE AND GENERAL SERVICE CONTRACTS

During the performance of this contract, the contractor agrees as follows:

The contractor or subcontractor, where applicable, will not discriminate against any employee or applicant for employment because of age, race, creed, color, national origin, ancestry, marital status, affectional or sexual orientation, gender identity or expression, disability nationality or sex. Except with respect to affectional or sexual orientation and gender identity or expression, the contractor will take affirmative action to ensure that such applicants are recruited and employed, and that employees are treated during employment, without regard to their age, race, creed, color, national origin, ancestry, marital status, affectional or sexual orientation, gender identity or expression, disability, nationality or sex. Such action shall include, but not be limited to the following: employment, upgrading, demotion, or transfer; recruitment or recruitment advertising; layoff or termination; rates of pay or other forms of compensation; and selection for training, including apprenticeship. The contractor agrees to post in conspicuous places, available to employees and applicants for employment, notices to be provided by the Public Agency Compliance Officer setting forth provisions of this nondiscrimination clause.

The contractor or subcontractor, where applicable will, in all solicitations or advertisements for employees placed by or on behalf of the contractor, state that all qualified applicants will receive consideration for employment without regard to age, race, creed, color, national origin, ancestry, marital status, affectional or sexual orientation, gender identity or expression, disability, nationality or sex.

The contractor or subcontractor, where applicable, will send to each labor union or representative or workers with which it has a collective bargaining agreement or other contract or understanding, a notice, to be provided by the agency contracting officer advising the labor union or workers' representative of the contractor's commitments under this act and shall post copies of the notice in conspicuous places available to employees and applicants for employment.

The contractor or subcontractor, where applicable, agrees to comply with any regulations promulgated by the Treasurer pursuant to N.J.S.A. 10:5-31 et seq., as amended and supplemented from time to time and the Americans with Disabilities Act.

The contractor or subcontractor agrees to make good faith efforts to employ minority and women workers consistent with the applicable county employment goals established in accordance with N.J.A.C. 17:27-5.2, or a binding determination of the applicable county employment goals determined by the Division, pursuant to N.J.A.C. 17:27-5.2.

The contractor or subcontractor agrees to inform in writing its appropriate recruitment agencies including, but not limited to, employment agencies, placement bureaus, colleges, universities, labor unions, that it does not discriminate on the basis of age, creed, color, national origin, ancestry, marital status, affectional or sexual orientation, gender identity or expression, disability, nationality or sex, and that it will discontinue the use of any recruitment agency which engages in direct or indirect discriminatory practices.

The contractor or subcontractor agrees to revise any of its testing procedures, if necessary, to assure that all personnel testing conforms with the principles of job-related testing, as established by the statutes and court decisions of the State of New Jersey and as established by applicable Federal law and applicable federal court decisions.

In conforming with the applicable employment goals, the contractor or subcontractor agrees to review all procedures relating to transfer, upgrading, downgrading and layoff to ensure that all such actions are taken without regard to age, creed, color, national origin, ancestry, marital status, affectional or sexual orientation, gender identity or expression, disability, nationality or sex, consistent with the statutes and court decisions of the State of New Jersey, and applicable Federal law and applicable Federal court decisions.

The contractor shall submit to the public agency, after notification of award but prior to execution of a goods and services contract, one of the following three documents:

Letter of Federal Affirmative Action Plan Approval
Certificate of Employee Information Report
Employee Information Report Form AA302

The contractor and its subcontractors shall furnish such reports or other documents to the Div. of Contract Compliances & EEO as may be requested by the office from time to time in order to carry out the purposes of these regulations, and public agencies shall furnish such information as may be requested by the Div. of Contract Compliance & EEO for conducting a compliance investigation pursuant to **Subchapter 10 of the Administrative Code at N.J.A.C. 17:27.**

AMERICANS WITH DISABILITIES ACT OF 1990

Equal Opportunity for Individuals with Disability

The CONTRACTOR and the OWNER do hereby agree that the provisions of Title II of the American With Disabilities Act of 1990 (the "ACT") (42 U.S.C. S12101 et seq.), which prohibits discrimination on the basis of disability by public entities in all services, programs, and activities provided or made available by public entities, and the rules and regulations promulgated pursuant thereunto, are made a part of this contract. In providing any aid, benefit, or service on behalf of the OWNER pursuant to this contract, the CONTRACTOR agrees that the performance shall be in strict compliance with the Act. In the event that the Contractor, its agents, servants, employees, or subcontractors violate or are alleged to have violated the Act during the performance of this contract, the CONTRACTOR shall defend the OWNER in any action or administrative proceeding commenced pursuant to this Act. The Contractor shall indemnify, protect, and save harmless the OWNER, its agents, servants, and employees from and against any and all suits, claims, losses, demands, or damages, of whatever kind or nature arising out of or claimed to arise out of the alleged violation. The CONTRACTOR shall, at its own expense, appear, defend, and pay any and all charges for legal services and any and all costs and other expenses arising from such action or administrative proceeding or incurred in connection therewith. In any and all complaints brought pursuant to the OWNER grievance procedure, the CONTRACTOR agrees to abide by any decision of the OWNER which is rendered pursuant to said grievance procedure. If any action or administrative proceeding results in an award of damages against the OWNER or if the
OWNER incurs any expense to cure a violation of the ADA which has been brought pursuant to its grievance procedure, the CONTRACTOR shall satisfy and discharge the same at its own expense.

The OWNER shall, as soon as practicable after a claim has been made against it, give written notice thereof to the CONTRACTOR along with full and complete particulars of the claim. If any action or administrative proceedings is brought against the OWNER or any of its agents, servants, and employees, the OWNER shall expeditiously forward or have forwarded to the CONTRACTOR every demand, complaint, notice, summons, pleading, or other process received by the OWNER or its representatives.

It is expressly agreed and understood that any approval by the OWNER of the services provided by the CONTRACTOR pursuant to this contract will not relieve the CONTRACTOR of the obligation to comply with the Act and to defend, indemnify, protect, and save harmless the OWNER pursuant to this paragraph.

It is further agreed and understood that the OWNER assumes no obligation to indemnify or save harmless the CONTRACTOR, its agents, servants, employees and subcontractors for any claim which may arise out of their performance of this Agreement. Furthermore, the CONTRACTOR expressly understands and agrees that the provisions of this indemnification clause shall in no way limit the CONTRACTOR'S obligations assumed in this Agreement, nor shall they be construed to relieve the CONTRACTOR from any liability, nor preclude the OWNER from taking any other actions available to it under any other provisions of the Agreement or otherwise at law.

CONTRACT LANGUAGE FOR
BUSINESS REGISTRATION CERTIFICATE COMPLAINCE

For Procurement (Goods and Services) Contracts
(including Purchase Orders)

N.J.S.A. 52:32-44 imposes the following requirements on contractors and all subcontractors that **knowingly** provide goods or perform services for a contractor fulfilling this contract: 1) the contractor shall provide written notice to its subcontractors to submit proof of business registration to the contractor; 2) prior to receipt of final payment from the contracting agency, a contractor must submit to the contracting agency an accurate list of all subcontractors or attest that none was used; 3) during the term of this contract, the contractor and its affiliates shall collect and remit, and shall notify all subcontractors and their affiliates that they must collect and remit to the Director, New Jersey Division of Taxation, the use tax due pursuant to the Sales and Use Tax Act, (N.J.S.A. 54:32B-1 et seq.) on all sales of tangible personal property delivered into this State.

A contractor, subcontractor or supplier who fails to provide proof of business registration or provides false business registration information shall be liable to a penalty or $25 for each day of violation, not to exceed $50,000 for each business registration not properly provided or maintained under a contract with the contracting agency. Information of the law and its requirements is available by calling (609)292-9292.

For Construction Contracts

N.J.S.A. 52:32-44 imposes the following requirements on contractors and all subcontractors that **knowingly** provide goods or perform services for a contractor fulfilling this contract:

1) The contractor shall provide written notice to its subcontractors and suppliers to submit proof of business registration to the contractor;
2) Subcontractors through all tiers of a project must provide written notice to their subcontractors and suppliers to submit proof of business registration and subcontractors shall collect proofs of business registration and maintain them on file;
3) Prior to receipt of final payment from a contracting agency, a contractor must submit to the contracting agency an accurate list of all subcontractors and suppliers or attest that none was used; and,
4) During the term of this contract, the contractor and its affiliates shall collect and remit, and shall notify all subcontractors and their affiliates that they must collect and remit, to the Director, New Jersey Division of Taxation, the use tax due pursuant to the Sales and Use Tax Act, (N.J.S.A. 52:32B-1 et seq.) on all sales of tangible personal property delivered into this State.

A contractor, subcontractor or supplier who fails to provide proof of business registration or provides false business registration information shall be liable to a penalty or $25 for each day of violation, not to exceed $50,000 for each business registration not properly provided or maintained under a contract with the contracting agency. Information of the law and its requirements is available by calling (609)292-9292.

Long Branch, New Jersey
ORDINANCE NO. 18-05

AN ORDINANCE TO AMEND AND SUPPLEMENT ORDINANCE NO. 13-05, KNOWN AS "AN ORDINANCE REQUIRING PUBLIC CONTRATING REFORM, AND AMENDING AND SUPPLEMENTING THE 'REVISED GENERAL ORDINANCES OF THE CITY OF LONG BRANCH, NEW JERSEY' ACCORDINGLY," AS ADOPTED ON MAY 10, 2005.

WHEREAS, on May 10, 2005, the City of Long Branch adopted Ordinance No. 13-05, known as "An Ordinance Requiring Public Contracting Reform, and Amending and Supplementing the 'Revised General Ordinances of the City of Long Branch, New Jersey' Accordingly" (the "Ordinance"); and

WHEREAS, the Ordinance places certain limitations upon the annual amount(s) of contributions that professionals may make to the political campaigns of the local elected officials who are ultimately responsible for the award of discretionary no-bid contracts for municipal professional services; and

WHEREAS, the intention of the Ordinance is to ensure trust in the process of local government, if not the quality or cost of services received, and to minimize any perceptions or concerns on the part of the public that discretionary no-bid contracts for municipal professional services are being awarded to professionals as a reward for having made substantial political contributions, or that the award of such contracts was influenced, even to a minor degree, by the payment of such contributions; and

WHEREAS, it is hereby found and declared that the practice of "wheeling," whereby one political organization channels campaign donations to another political organization with the intention to conceal or misrepresent the source of the contribution, may be utilized as a loophole to circumvent the proscriptions contained within the Ordinance; and

WHEREAS, the City Council of the City of Long Branch, in a continuing effort to ensure the integrity of the award of public professional service contracts, has therefore determined that it would be in the best interests of the City, and its residents, to amend the Ordinance in an attempt to curb the practice known as "wheeling;" and

WHEREAS, the City Council of the City of Long Branch also wishes to take this opportunity to clarify the "arbitration" provision referenced in Section 3(c) thereof; and

WHEREAS, the City Council of the City of Long Branch finds that it is in the best interest of the City and its residents to require that a contribution of more

than fifty dollars ($50.00) received by a candidate be reported in the manner set forth by the laws and regulations of the State of New Jersey.

NOW, THEREFORE, BE AND IT IS HEREBY ORDAINED, that Ordinance No. 13-05, known as "An Ordinance Requiring Public Contracting Reform, and Amending and Supplementing the 'Revised General Ordinances of the City of Long Branch, New Jersey' Accordingly," which was adopted on May 10, 2005, is hereby amended and supplemented as follows:

SECTION 1

Prohibition on Awarding Professional Contracts to Certain Contributors

(a) The City of Long Branch shall not enter into an agreement for professional services with any individual and/or professional business entity if that individual or entity has solicited or made any contribution of money or pledge of a contribution including in-kind contributions, to a campaign of any City of Long Branch candidate for Council or Mayor, in excess of the threshold specified in subsection (d) of this Section within one calendar year immediately preceding the date of the contract or agreement unless cured pursuant to Section 3. The prohibition set forth in this Paragraph shall also apply to any solicitation or contribution of money or pledge of a contribution including in-kind contributions made during the applicable time period to any City of Long Branch or Monmouth County Party Committee, or to any political action committee (PAC) that is organized for the primary purpose of promoting or supporting City of Long Branch candidates for Council or Mayor, so long as the solicitation or contribution was made with the intention on the part of the contributor to conceal or misrepresent the source of the contribution.

(b) No professional business entity which enters into negotiations for, or agrees to, any contact or agreement with the municipality or any department or agency thereof or any of its independent authorities for the rendition of professional services shall knowingly solicit or make any contribution of money, or pledge of a contribution, including in-kind contributions, to any City of Long Branch candidate or holder of public office having ultimate responsibility for the award of the contract, in excess of the amount set forth herein. This Section is to include any and all professionals who provide political contributions to any candidate for an office whether or not that candidate is presently in office or seeks office. The prohibition set forth in this Paragraph shall also apply to any solicitation or contribution of money or pledge of a contribution including in-kind contributions to any City of Long Branch or Monmouth County Party Committee, or to any political action committee (PAC) that is organized for the primary purpose of promoting or supporting City of Long Branch candidates for Council or Mayor, so long as the solicitation or contribution was made with the intention on the part of the contributor to conceal or misrepresent the source of the contribution.

(c) For purpose of this ordinance, a "professional business entity" seeking a public contract means an individual including the individual's spouse, if

any, and any child living at home; person; firm; corporation, professional corporation; partnership; organization; or association. The definition of a business entity includes all principals who own ten percent (10%) or more of the equity in the corporation or business trust, partners, and officers in the aggregate employed by the entity as well as any subsidiaries directly controlled by the business entity.

(d) Any individual meeting the definition of "professional business entity" under this section may annually contribute a maximum of five hundred dollars ($500.00) per candidate for Mayor and/or Council Member on an annual basis whether or not that individual has a professional services contract in place or not to the maximum extent of three thousand dollars ($3,000) per annum per business entity. This section shall apply to any presently sitting Councilperson and/or the Mayor of the City of Long Branch and shall also apply to any individual who seeks to run for the office of Council person and/or Mayor of the City of Long Branch.

(i) Any individual that owns less than ten (10%) percent of a professional business entity which contracts with the City of Long Branch shall not be treated as a part of that entity.

(e) For purposes of this section, the office that is considered to have ultimate responsibility for the award of the contract shall be:

(1) The City of Long Branch, if the contract requires approval or appropriation from the Council.

(2) The Mayor of the City of Long Branch, if the contract requires approval of the Mayor, or if a public officer who is responsible for the award of a contract is appointed by the Mayor.

SECTION 2
Contributions Made Prior to Effective Date

No contribution of money or any other thing of value, including in-kind contributions, made by a professional business entity to any municipal candidate for Mayor or Council, or to any municipal or county party committee, or to any political action committee (PAC) that is organized for the primary purpose of promoting or supporting City of Long Branch candidates for Council or Mayor, shall be deemed a violation of this section, nor shall an agreement for property, good or services, of any kind whatsoever, be disqualified thereby, if that contribution was made by the professional business entity prior to the effective date of this section.

SECTION 3
Penalty

(a) All City of Long Branch professional service agreements shall provide that it shall be a breach of the terms of the government contract for a professional business entity as defined in Section 1(c) to violate Section 1(b) or to knowingly conceal or misrepresent contributions given or received, or to make or solicit contributions through intermediaries for the purpose of concealing or misrepresenting the source of the contribution.

(b) Any professional business entity as defined in Section 1(c) and (d) who knowingly fails to reveal a contribution made in violation of this Act, or who knowingly makes or solicits contributions through intermediaries for the purpose of concealing or misrepresenting the source of the contribution, shall be subjected to a fine in the sum of $2,500 so far as the first offense and for any second offense, shall be disqualified from eligibility for future City of Long Branch contracts for a period of four calendar years from the date of the violation.

(c) There shall be no breach of contract in the event a contribution is questioned and as a result of the questioning of the contribution the individual and/or business entity who makes the contribution requests that the contribution be returned by the campaign committee, the candidate or the political action committee to whom such contribution was made. In the event of any disputes as to whether or not a campaign contribution is proper the matter shall be submitted to arbitration before a retired Judge of the Superior Court of New Jersey.

SECTION 4
Reporting Requirements

Any contribution received by a candidate committee, joint candidates committee, or political committee, during an election fund report period of more than fifty dollars ($50.00) or aggregate contributions received by such a committee in an election from a contributor totaling more than fifty dollars ($50.00) during such a report period shall be reported by providing the information set forth in N.J.A.C. 19:25-10.2

SECTION 5
Severability

If any provision of this law, or the application of any such provision to any person or circumstances, shall be held invalid, the remainder of this law to the extent it can be given effect, or the application of such provision to persons or circumstances other than those to which it is held invalid, shall not be affected thereby, and to this extent the provisions of this law are severable.

SECTION 6
Effective Date

This Ordinance shall take effect immediately upon final passage and publication in accordance with the law.

SECTION 7
Repealer

All other Ordinance or parts of Ordinances inconsistent herewith are hereby repealed to the extent of such inconsistency.

Introduced: 6/14/05
Adopted: 6/28/05

CITY OF LONG BRANCH
DOCUMENT SUBMISSION CHECKLIST

REQUIRED		READ, SIGNED & SUBMITTED
Yes	PROPOSAL AS REQUIRED IN RFQ	☐
Yes	STOCKHOLDER DISCLOSURE CERTIFICATION	☐
Yes	NON-COLLUSION AFFIDAVIT	☐
Yes	AFFIRMATIVE ACTION QUESTIONAIRE	☐

		REVIEWED
Yes	MANDATORY AFFIRMATIVE ACTION LANGUAGE	☐
Yes	AMERICANS WITH DISABLILITIES ACT OF 1990	☐
Yes	N. J. BUSINESS REGISTRATION LANGUAGE	☐
Yes	LONG BRANCH PAY TO PLAY ORDINANCE	☐

CITY OF LONG BRANCH, MUNICIPAL BUILDING, 344 BROADWAY, LONG BRANCH, N.J. 07740 (732) 571-5645

Howard H. Woolley, Jr
Business Administrator

TO: Council Members

FROM: Howard H. Woolley, Jr.
Business Administrator

RE: Contract for Lobbying Consultant Services

DATE: July 2, 2008

After examining the proposals submitted to the City of Long Branch for Lobbying Consultant Services, it is the recommendation of the Mayor and Business Administrator to award Public Strategies Impact, LLC a contract for services in the amount of $30,000.00 plus up to $2,000 for expenses for the term of July 1, 2008 through June 30, 2009.

Based upon prior history, the City of Long Branch has determined that Public Strategies Impact, LLC has the experience, expertise and resources to provide the services required by the City of Long Branch.

HHW:gb

R# 224-08

RESOLUTION AUTHORIZING CONTRACTS FOR LEGAL SERVICES POOL FOR THE CONTRACT YEAR JULY 1, 2008 THROUGH JUNE 30, 2009

WHEREAS, the City of Long Branch has the need to contract with firms to provide legal services for matters that may arise during the contract year of July 1, 2008 through June 30, 2009, and has determined that it is in the City's best interest to establish a pre-approved pool of qualified legal firms from which to award contracts; and

WHEREAS, the City, through a Fair and Open Process, advertised on its website the solicitation for receipt of qualifications from legal firms for said services, publicly opened and read on June 30, 2008 (Fair and Open #015-08), and the following firms submitted conforming qualifications:

Greenbaum, Rowe, Smith & Davis, LLP, Woodbridge, NJ
McKenna, Dupont, Higgins & Stone,PC, Red Bank, NJ
DiFrancesco, Bateman, Coley, Yospin, Kunzman, Davis, Lehrer, Warren Twp, NJ
Mark R. Aikins, LLC, Wall, NJ
Maxwell Colby, Esq. Ocean, NJ

WHEREAS, the qualification submissions from Greenbaum Rowe Smith & Davis, McKenna Dupont Higgins & Stone, DiFrancesco Bateman Coley Yospin Kunzman Davis Lehrer, Mark R. Aikins, LLC, and Maxwell Colby, Esq. were reviewed by the Mayor and Business Administrator, and it was determined that each of the firms have adequate experience, staffing, and resources to be considered for assignments for legal services as the City may require during the coming contract year, and further the Mayor and Administrator have recommended that these firms be included in the 2008-2009 Legal Services Pool and awarded open ended contracts; and

WHEREAS, all contractors awarded professional services contracts are required to comply with City Ordinance # 18-05, and by execution of the contract documents and Political Contribution Affidavit, each firm acknowledges that it complies with the Ordinance and has not made any political contributions that would bar it from being awarded a contract with the City of Long Branch; and

WHEREAS, in accordance with Local Public Contracts Law, the City may authorize open-ended contracts to these firms, based upon availability of funds, and with the provision of certification of funds provided by issuance of a Purchase Order prior to any work being assigned or performed.

NOW THEREFORE BE IT RESOLVED that the City Council of the City of Long Branch hereby authorizes establishment of a Legal Services Pool, and awards open ended contracts to the following firms:

Greenbaum, Rowe, Smith & Davis, LLC
McKenna, Dupont, Higgins & Stone, PC
DiFrancesco, Bateman, Coley, Yospin, Kunzman, Davis, Lehrer, PC
Mark R. Aikins, LLC
Maxwell Colby, Esq.

for such legal services as may be required by the City and assigned by the City Attorney, for the term from July 1, 2008 through June 30, 2009, in accordance to with the Request for Qualifications, proposals, and contract documents annexed hereto.

BE IT FURTHER RESOLVED that any and all work that may be assigned to any of the firms by the Department of Administration, through the Office of the City Attorney, shall be subject to availability of funds, and said assignment authorized by issuance of a purchase order prior to any work being assigned or performed.

AGREEMENT
THIS AGREEMENT MADE THIS DAY OF

BETWEEN:

CITY OF LONG BRANCH
344 Broadway
Long Branch, NJ 07740

Hereinafter called the CITY

AND

GREENBAUM, ROWE, SMITH & DAVIS, LLP
Po Box 5600
Woodbridge, NJ 07095-0988

WITNESSETH:

WHEREAS, the City of Long Branch is desirous of retaining Greenbaum, Rowe, Smith & Davis, LLP to provide legal services to aid the City; and

NOW, THEREFORE, in consideration for the execution of this Agreement and the supplying of services hereunder, the parties agree as follows:

1. This contract is awarded as an open-ended contract. During the term of the contract, a purchase order will be issued, with a not to exceed value, to authorize work for specific matters. No services are to be provided by the contractor prior to the date of the purchase order; further, the contractor may not provide services, nor bill for services, for costs exceeding the amount of the purchase order. It is the Contractor's responsibility to notify the City prior to providing services if there are insufficient funds left on a specific purchase order, and the insure that an amended or new purchase order has been issued by the City.

Contractor is required to bill for services on a monthly basis, at hourly rates as specified in its proposal. Bills are to be forwarded to the City Finance Office no later that twenty-one calendar days after the end of the calendar month, or the date of the contractor's monthly billing cycle.

2. Greenbaum, Rowe, Smith & Davis LLP agrees to provide services.

3. Contractor will submit billing and vouchers on a monthly basis.

4. The term of said contract shall be to June 30, 2009.

5. The City will not honor any of your invoices that exceed the contract amount unless, prior to you or your firm exceeding that amount you notify the City so that an amendment to your contract can be considered by the Mayor and Council, and, if appropriate, approved.

Due to the number of professional service contractors the City deals with, it is important for each contractor to recognize the limit of their contract, and advise the City Administrator and City Attorney of the need to continue service with an amendment to the contract.

The Administrator and Attorney would then make the appropriate recommendation to the City Council based upon the facts and circumstances, as they exist at that time.

However, please understand that this application must be made In advance of providing any services the cost of which would exceed the contract amount, and only after having an amended contract approved by resolution of City Council will you be

authorized to proceed.

6. The Contractor certifies it complies with Affirmative Action regulations. During the performance of this contract, the contractor agrees as follows:

The contractor or subcontractor, where applicable will not discriminate against any employee or applicant for employment because of age, race, creed, color, national origin, ancestry, marital status, affectional or sexual orientation, or sex. Except with respect to affectional or sexual orientation, the contractor will take affirmative action to ensure that such applicants are recruited and employed, and that employees are treated during employment, without regard to their age, race, creed, color, national origin, ancestry, marital status, affectional or sexual orientation or sex. Such action shall include, but not be limited to the following: employment, upgrading, demotion, or transfer; recruitment or recruitment advertising; layoff or termination; rates of pay or other
forms of compensation; and selection for training including apprenticeship. The contractor agrees to post in conspicuous places, available to employees and applicants for employment, notices to be provided by the Public Agency Compliance Officer, setting forth provisions of this non-discrimination clause.

The contractor or subcontractor, where applicable, will, in all solicitations or advertisements for employees placed by or on behalf of the contractor, state that all qualified applicants will receive consideration for employment without regard to their age, race, creed, color, national origin, ancestry, marital status, affectional or sexual orientation or sex.

The contractor or subcontractor, where applicable, agrees to comply with any regulations promulgated by the Treasurer pursuant to NJSA 10:5-36 et. seq. as amended and supplemented from time to time and the Americans with

Disabilities Act.

The contractor or subcontractor agrees to make good faith efforts to employ minority and women workers consistent with the applicable county employment goals established in accordance with NJAC 17:275.2, or a binding determination of the applicable county employment goals determined by the Division, pursuant to NJSA 17:275.2.

The contractor or subcontractor agrees to inform in writing it's appropriate recruitment agencies including, but not limited to, employment agencies, placement bureaus, colleges, universities, labor unions that it does not discriminate on the basis of age, creed, color, national origin, ancestry, marital status, affectional or sexual orientation or sex, and that it will discontinue the use of any recruitment agency which engages in direct or indirect discriminatory practices. The contractor or subcontractor agrees to revise any of its testing procedures, if necessary, to assure that all personnel testing conforms with the principals of job related testing, as established by the statutes and court decisions of the state of New Jersey and as established by applicable federal law and applicable federal court decisions.

In conforming with the applicable employment goals, the contractor or subcontractor agrees to review all procedures relating to transfer, upgrading, down grading and layoff to ensure that all such actions are taken without regard to age, creed, color, national origin, ancestry, marital status, sex, affectional or sexual orientation, and conform with the applicable employment goals, consistent with the statutes and court decisions of the state of New Jersey, and applicable federal law and applicable Federal court decisions.

The contractor and its subcontract shall furnish such reports or other documents to the Division of contract compliance and EEO as maybe requested by the office from time to time in order to carry out the purposes of these regulations, and public agency shall furnish information as may be requested by the Division of Contract Compliance and EEO for conducting a compliance investigation pursuant to subchapter 10 of the administrative code of NJAC17:27.

A contractor. subcontractor or supplier who fails to provide proof of business registration or provides false business registration information shall be liable to a penalty or $25 for each day of violation, not to exceed $50,000 for each business registration not properly provided or maintained under a contract with the contracting agency. Information of the law and its requirements is available by calling (609) 292-9292.

7. The City shall publish notice of said award of this agreement in the legal ad section of its official newspaper, and shall have on file for public inspection a copy of this contract and authorizing resolution as prescribed by law.

8. "The contractor, in executing this contract document, acknowledges that it complies with City Ordinance # 18-05, annexed hereto, and New Jersey ELEC laws, rules and regulations, and has not given any political contribution that would bar it from being awarded this contract."

9. Contractor is advised that the responsibility to file an annual disclosure statement on political contributions with the New Jersey Election Enforcement commission pursuant to N.J.S.A. 19:44A-20.3 (P .L. 205, c, 271, s.3), if the contractor receives contracts in excess of

$50,000 from public Entities in a calendar year. It is the contractor's responsibility to determine if filing is necessary. Additional information on this requirement is available from ELEC at 888-313-3532 or at www.elec.state.ni.us.

10. This Contract shall be binding upon the City has caused this instrument to be signed by ADAM SCHNEIDER, MAYOR attested by IRENE A. JOLINE, CLERK and the Municipal Seal to be hereunto affixed and the CONTRACTOR hereunto set their hand and seals, or caused these presents to be signed by their proper corporate officers and their proper corporate seal to be hereto affixed, the day and year first above mentioned.

ATTEST:

CITY OF LONG BRANCH

_____

Irene A. Joline, City Clerk

_____

Adam Schneider, Mayor

ATTEST:

BY:

_____

_____

Greenbaum Rowe Smith & Davis LLP
COUNSELORS AT LAW
METRO CORPORATE CAMPUS ONE
P.O. BOX 5600
WOODBRIDGE, NJ 07095-0988
(732) 549-5600 FAX (732) 549-1881
DELIVERY ADDRESS: 99 WOOD AVENUE SOUTH, ISELIN, NJ 08830-2712
INFO@GREENBAUMLAW.COM
WWW.GREENBAUMLAW.COM

ALAN E. DAVIS, ESQ.
PARTNER
(732) 476-2430 - DIRECT DIAL
(732) 476-2431 - DIRECT FAX
ADAVIS@GREENBAUMLAW.COM

ROSELAND OFFICE:
75 LIVINGSTON AVENUE
SUITE 301
ROSELAND, NJ 07068-3701
(973) 535-1600
FAX (973) 535-1698

June 27, 2008

Via Federal Express

Purchasing Office
c/o Office of the City Clerk
City Hall
344 Broadway
Long Branch, NJ 07740

Re: Proposal for Legal Services:
Pool Attorneys
Notice #FO-015-08

Dear Sir or Madam:

Please accept the following Proposal for Legal Services in response to the City of Long Branch's request for Proposals Legal Services, Notice Number F-015-08. It is this firm's understanding that the City's acceptance of this Proposal does not constitute an award of contract for all legal services described in the Notice, but shall place the firm among a pool of attorneys from which the City will select, on an as-needed basis, appropriate counsel for the specific legal services needed. It is further noted with respect to any legal services for which this firm is selected, such representation shall be explicitly and specifically limited as follows:

Greenbaum, Rowe, Smith & Davis LLP's responsibilities shall not include the identification or selection of developers or participation in the ranking of redevelopers prior to said selection in connection with redevelopment activities in the City, or in any other capacity.

Subject to the above conditions and qualifications, GRS&D hereby submits the following in response to the City's request for proposals:

1. Greenbaum, Rowe, Smith & Davis LLP
99 Wood Avenue South
Metro Corporate Campus One
P.O. Box 5600
Woodbridge, New Jersey 07095 (Corporate Office)
Telephone: (732) 549-5600
Fax: (732) 549-1881

75 Livingston Avenue, Suite 301
Roseland, New Jersey 07068-3701
Telephone: (973) 535-1600
Fax: (973) 535-1698

2. Greenbaum, Rowe, Smith & Davis LLP was founded in 1950 by Robert S. Greenbaum and Arthur M. Greenbaum as a successor to the practice started by their father, William, in 1914. Today, Greenbaum, Rowe, Smith & Davis LLP has approximately 110 attorneys in two offices, with its main offices located in Woodbridge and satellite offices in Roseland. A paralegal staff of 16 supports the firm's attorneys and numerous clerical and administrative support services employees.

3. The partners of the firm are set forth on Schedule A, attached hereto.

4. The firm has a broad-based practice and attorneys specializing in numerous areas of law, including trusts and estates, bankruptcy, criminal, real estate, family, commercial and civil litigation, and has extensive experience in both state and federal courts, as well as before administrative and local bodies. The firm's real estate department has extensive experience in municipal law and land use and a well-respected group of attorneys. The firm also has a considerable litigation department that is experienced in a broad range of commercial and civil litigation.

The firm cannot specifically discuss which attorneys may be responsible for the services to be provided, as such retention shall be based upon a later determination of what specific services are needed. That notwithstanding, the firm is capable of handling virtually any legal services needed. Below is a description of certain attorneys who have had previous experience with the City and would likely be the attorneys to provide legal services to the City.

Robert S. Goldsmith is a partner in the firm's Real Estate Department and Chair of its Redevelopment Practice Group. Mr. Goldsmith has been involved in representing the City in connection with the Oceanfront Redevelopment since the mid 1990s. Although such representation was primarily handled by the Honorable Peter S. Buchsbaum (who has since left the firm to join the Bench as a Superior Court Judge in Hunterdon County), Mr. Goldsmith has

always been a crucial counselor for the City in connection with the redevelopment and has been the primary attorney for the City in connection with the redevelopment since Judge Buchsbaum's departure for the Bench in 2004. Mr. Goldsmith was the partner first responsible for handling Koplitz litigation matters on behalf of the City in early 2000.

Mr. Goldsmith was admitted to the New Jersey Bar after graduating from Rutgers Law School in Newark in 1977, then clerked for the Honorable Milton B. Conford in 1977-78, for both the Appellate Division and New Jersey Supreme Court. Mr. Goldsmith was admitted to the New York Bar in 1989.

Mr. Goldsmith has extensive experience and is a recognized authority in local government, land use and redevelopment matters. Mr. Goldsmith has served as counsel to the Morristown Parking Authority since 1983 and has served as special counsel and provided legal services to numerous special improvement districts throughout the State. Mr. Goldsmith has served as special redevelopment counsel for 8 municipalities in connection with major redevelopment projects, including Long Branch, and has provided counsel with respect to numerous other redevelopment projects.

Robert Beckelman is an associate in the firm's Real Estate Department who handles redevelopment, land use and local government litigation as well as transaction and regulatory work. Mr. Beckelman first became involved with Koplitz litigation matters on behalf of the City in early 2001 and since that time became primarily responsible for handling Koplitz litigation on behalf of the City. Mr. Beckelman obtained a substantial financial payment to the City in settlement of Koplitz litigation matters in 2007, fully concluding all Koplitz related litigation.

Mr. Beckelman also became involved with redevelopment matters on behalf of the City beginning in 2004 after Judge Buchsbaum left for the Bench and also provided consulting services for the City in connection with affordable housing obligations and COAH Third Round Rules compliance. Mr. Beckelman was admitted to the New Jersey Bar after graduating from Rutgers Law School- Newark in 2000, and has been an associate with the firm since that time.

The firm may periodically consult with other attorneys as deemed appropriate or desirable in connection with any specialized knowledge such attorney may have with respect to specific issues that may arise. A biography of all of the firm's attorneys is available at the firm's website, www.greenbaumlaw.com.

5. a. Donald S. Ayres
Director of Economic Development
12 South High Street
Millville, NJ 08332

b. Hon. Kenneth E. Pringle, Mayor
Borough of Belmar
601 Main Street, P.O. Box A
Belmar, NJ 07719

6. As noted above, the firm has provided legal services to the City in connection with redevelopment matters since the mid-1990s and the Koplitz litigation matters since early 2000.

7. Messrs. Goldsmith and/or Beckelman have provided or continue to provide legal services to the following municipalities: City of Long Branch, Borough of Belmar, City of North Wildwood, City of Millville, City of New Brunswick, Town of Morristown-Epstein's, City of Newark, Borough of Princeton, City of West Orange, Township of Westfield, Township of Woodbridge.

8. The firm would offer a blended rate of $215 per hour for all attorneys. Mr. Goldsmith's current standard billing rate is $395.00 per hour and Mr. Beckelman's current standard billing rate is $280 per hour.

9. The firm will also charge the City for various expenses incurred in connection with legal services, such as copies, faxes, filing fees, delivery fees, travel expenses, and telephone long distance rates.

10. Copy of current Certificate of Insurance for Professional Liability Insurance enclosed.

Thank you for your consideration.

Sincerely,

Alan E. Davis SK

ALAN E. DAVIS

1019118.01

SCHEDULE A

Michael A. Backer
Darren C. Barreiro
Kenneth T. Bills
Raymond M. Brown
David L. Bruck
Peter D. Crawford, Jr.
Alan E. Davis
Steven C. Delinko
Thomas J. Denitzio, Jr.
Martin E. Dollinger
Dennis A. Estis
Michael K. Feinberg
W. Raymond Felton
Dean A. Gaver
Robert S. Goldsmith
Meryl A.G. Gonchar
Barry S. Goodman
Robert M. Goodman
William D. Grand
Marc J. Gross
Richrd L. Hertzberg
Emily A. Kaller
Luke J. Kealy
Galit Kierdut
Sabrina A. Kogel
C. Brian Kornbrek
Martin L. Lepelstat
Christine F. Li
Lawrence P. Maher
Hal W. Mandel
Hany A. Mawla
Eric H. Melzer
Alan S. Naar
John D. North
Steven Nudelman
Joseph M. Oriolo
Jacqueline M. Printz
David J. Ramsey
David A. Roth
Paul A. Rowe
Olivier Salvagno
Robert C. Schachter
Aron M. Schwartz
Brian R. Selvin
Thomas C. Senter
Ellen A. Silver
Wendell A. Smith
Mark H. Sobel
Marina Solo
Carlton T. Spiller
Andrea J. Sullivan
Dina M. Vanides
Cipora Winters
Douglas K. Wolfson
Gary K. Wolinetz

ALAS
ATTORNEYS' LIABILITY ASSURANCE SOCIETY, INC.,
A RISK RETENTION GROUP

January 29, 2008

Greenbaum, Rowe, Smith & Davis LLP
99 Wood Avenue South
Iselin, NJ 08830-2712

To Whom It May Concern:

CONFIRMATION OF INSURANCE

We hereby confirm that Greenbaum, Rowe, Smith & Davis has Professional Liability Coverage under Policy ALA#1375 with an annual limit of $40,000,000 per claim and $80,000,000 in the aggregate with the right, under stated conditions, to purchase extended reporting rights upon termination of such Policy by ALAS.

The self-insured retention under such Policy is $500,000 each claim up to an aggregate of $1,000,000 and $100,000 each claim thereafter.

The Policy effective date is from January 1, 2008 to January 1, 2009.

Such Policy is subject to the terms, conditions, limitations and exclusions stated therein.

ATTORNEYS' LIABILITY ASSURANCE SOCIETY, INC.,
A RISK RETENTION GROUP

By: _____ Date: 1/29/08

Joseph R. Suster
Assistant Director of Underwriting

311 South Wacker Drive, Suite 5700
Chicago, IL 60606-6629
tel 312-697-6900 fax 312-697-6901 Web site alas.com

STOCKHOLDER DISCLOSURE CERTIFICATION

If bidder is a sole proprietorship, check here _____
And do not complete this statement.

The UNDERSIGNED, as bidder, in accordance with P.L. 1977, Chapter 33, of the State of New Jersey, declares and submits this Statement of Ownership.

Bidder is a Corporation ( ) Partnership (X)

____ I certify that the list below contains the names and home addresses of all stockholders holding 10% or more of the issued and outstanding stock of the undersigned. (Use additional sheets in this format if necessary.)

____ I certify that no one stockholder owns 10% or more of the issued and outstanding stock of the undersigned.

Stockholder/Partner

Name N/A
Home Address

Name N/A
Home Address

Name N/A
Home Address

Name N/A
Home Address

Name N/A
Home Address

Name N/A
Home Address

(If a corporation or partnership is shown as an owner of 10% or more stock, you must attach a Stockholder Disclosure form for that corporation/partnership.)

THIS FORM MUST BE INCLUDED WITH BID SUBMISSION.

Subscribed and sworn
Before me this day

June 27, 2008

Diane C Acquisto
Notary Public
My commission expires:

[redacted]

DIANE C. ACQUISTO
A Notary Public of New Jersey
My Commission Expires March 30, 2009

(Signature of Officer/Owner)

ALAN E. DAVIS, PARTNER
(Name and Title)

(CORPORATE SEAL)

NON-COLLUSION AFFIDAVIT

STATE OF NEW JERSEY
COUNTY OF MIDDLESEX

I, ALAN E. DAVIS residing in FAIR HAVEN
(name of municipality)

in the County of MONMOUTH and State of NEW JERSEY of full age,

being duly sworn according to law on my oath dispose and say that:

I, am A PARTNER of the firm of GREENBAUM, ROWE, SMITH & DAVIS LLP
(title or position) (name of firm)

the bidder making this Proposal for the bid proposal entitled LEGAL SERVICES POOL
(title of bid proposal)
_____, and that I executed the said proposal with full authority to do so,

that said bidder has not, directly or indirectly entered into any agreement, participated in any collusion, or otherwise taken any action in restraint of free, competitive bidding in connection with the above named project; and that all statements contained in said proposal and in this affidavit are true and correct, and made with full knowledge that the **City of Long Branch** relies upon the truth of the statements contained in said Proposal, and in the statements contained in this affidavit, in awarding the contract for the said project.

I further warrant that no person or selling agency has been employed or retained to solicit or secure such contract upon an agreement or understanding for a commission, percentage, brokerage, or contingent fee, except bona fide employees or bona fide established commercial or selling agencies maintained by GREENBAUM, ROWE, SMITH & DAVIS LLP
(name of firm)

(signature of affiant)

Subscribed and sworn to
before me this day

June 27, 2008

Diane C. Acquisto
(signature of notary)

My Commission expires:

DIANE C. ACQUISTO
A Notary Public of New Jersey
My Commission Expires March 30, 2009

REQUIRED EVIDENCE
AFFIRMATIVE ACTION REGULATION
P.L. 1975, C. 127 (N.J.A.C. 17:27)

If awarded a contract, all procurement and service contractors will be required to comply with the requirements of P.L. 1975, c. 127, (N.J.A.C. 17:27). Within seven (7) days after receipt of the notification of intent to award the contract or receipt of the contract, whichever is sooner, the contractor should present one of the following to the Purchasing Agent.

1. A photocopy of a valid letter from the U.S. Department of Labor that the contractor has an existing federally-approved or sanctioned Affirmative Action Plan (good for one year from the date of the letter).

OR

2. A photocopy of approved Certificate of Employee Information Report from the State of New Jersey.

OR

3. An Affirmative Action Employee Information Report (Form AA302).

OR

4. All successful construction contractors must submit, within three days (3) of the signing of the contract, an Initial Project Manning Report (AA201) for any contract award that meets or exceeds the Public Agency bidding threshold (available upon request).

NO FIRM MAY BE ISSUED A CONTRACT UNLESS IT COMPLIES WITH THE AFFIRMATIVE ACTION REGULATIONS OF P.L. 1975, C. 127.

The following questions must be answered by all bidders:

1. Do you have a federally-approved or sanctioned Affirmative Action Program?

   ___Yes ✓ No If yes, please submit copy of such approval.

2. Do you have a Certificate of Employee Information Report Approval?

   ✓ Yes ___No If yes, please submit copy of such certificate.

The undersigned contractor certifies that he is aware of the commitment to comply with the requirements of P.L. 1975, c. 127, and agrees to furnish the required documentation pursuant to law.

COMPANY: Greenbaum Rowe Smith & Davis LLP

SIGNATURE: _____

TITLE: Partner

NOTE: A CONTRACTOR'S BID MUST BE REJECTED AS NON-RESPONSIVE IF A CONTRACTOR FAILS TO COMPLY WITH REQUIREMENTS OF P.L.1975, C. 127, WITHIN THE REQUIRED TIME FRAME.

EXHIBIT A
MANDATORY EQUAL EMPLOYMENT OPPORTUNITY LANGUAGE
N.J.S.A. 10:5-31 et seq. (P.L. 1975, C. 127)
N.J.A.C. 17:27
GOODS, PROFESSIONAL SERVICE AND GENERAL SERVICE CONTRACTS

During the performance of this contract, the contractor agrees as follows:

The contractor or subcontractor, where applicable, will not discriminate against any employee or applicant for employment because of age, race, creed, color, national origin, ancestry, marital status, affectional or sexual orientation, gender identity or expression, disability nationality or sex. Except with respect to affectional or sexual orientation and gender identity or expression, the contractor will take affirmative action to ensure that such applicants are recruited and employed, and that employees are treated during employment, without regard to their age, race, creed, color, national origin, ancestry, marital status, affectional or sexual orientation, gender identity or expression, disability, nationality or sex. Such action shall include, but not be limited to the following: employment, upgrading, demotion, or transfer; recruitment or recruitment advertising; layoff or termination; rates of pay or other forms of compensation; and selection for training, including apprenticeship. The contractor agrees to post in conspicuous places, available to employees and applicants for employment, notices to be provided by the Public Agency Compliance Officer setting forth provisions of this nondiscrimination clause.

The contractor or subcontractor, where applicable will, in all solicitations or advertisements for employees placed by or on behalf of the contractor, state that all qualified applicants will receive consideration for employment without regard to age, race, creed, color, national origin, ancestry, marital status, affectional or sexual orientation, gender identity or expression, disability, nationality or sex.

The contractor or subcontractor, where applicable, will send to each labor union or representative or workers with which it has a collective bargaining agreement or other contract or understanding, a notice, to be provided by the agency contracting officer advising the labor union or workers' representative of the contractor's commitments under this act and shall post copies of the notice in conspicuous places available to employees and applicants for employment.

The contractor or subcontractor, where applicable, agrees to comply with any regulations promulgated by the Treasurer pursuant to N.J.S.A. 10:5-31 et seq., as amended and supplemented from time to time and the Americans with Disabilities Act.

The contractor or subcontractor agrees to make good faith efforts to employ minority and women workers consistent with the applicable county employment goals established in accordance with N.J.A.C. 17:27-5.2, or a binding determination of the applicable county employment goals determined by the Division, pursuant to N.J.A.C. 17:27-5.2.

The contractor or subcontractor agrees to inform in writing its appropriate recruitment agencies including, but not limited to, employment agencies, placement bureaus, colleges, universities, labor unions, that it does not discriminate on the basis of age, creed, color, national origin, ancestry, marital status, affectional or sexual orientation, gender identity or expression, disability, nationality or sex, and that it will discontinue the use of any recruitment agency which engages in direct or indirect discriminatory practices.

The contractor or subcontractor agrees to revise any of its testing procedures, if necessary, to assure that all personnel testing conforms with the principles of job-related testing, as established by the statutes and court decisions of the State of New Jersey and as established by applicable Federal law and applicable federal court decisions.

In conforming with the applicable employment goals, the contractor or subcontractor agrees to review all procedures relating to transfer, upgrading, downgrading and layoff to ensure that all such actions are taken without regard to age, creed, color, national origin, ancestry, marital status, affectional or sexual orientation, gender identity or expression, disability, nationality or sex, consistent with the statutes and court decisions of the State of New Jersey, and applicable Federal law and applicable Federal court decisions.

The contractor shall submit to the public agency, after notification of award but prior to execution of a goods and services contract, one of the following three documents:

Letter of Federal Affirmative Action Plan Approval
Certificate of Employee Information Report
Employee Information Report Form AA302

The contractor and its subcontractors shall furnish such reports or other documents to the Div. of Contract Compliances & EEO as may be requested by the office from time to time in order to carry out the purposes of these regulations, and public agencies shall furnish such information as may be requested by the Div. of Contract Compliance & EEO for conducting a compliance investigation pursuant to **Subchapter 10 of the Administrative Code at N.J.A.C. 17:27.**

Certification 7186

CERTIFICATE OF EMPLOYEE INFORMATION REPORT

RENEWAL

This is to certify that the contractor listed below has submitted an Employee Information Report pursuant to N.J.A.C. 17:27-1.1 et. seq. and the State Treasurer has approved said report. This approval will remain in effect for the period of

15-MAR-2007 to 15-MAR-2010

GREENBAUM, ROWE, SMITH & DAVIS LLP
99 WOOD AVE. SOUTH
ISELIN NJ 08830

Bradley Abelow
State Treasurer

CERT-1

01/20/05

Taxpayer Identification# **221-544-785/000**

Dear Business Representative:

Congratulations! You are now registered with the New Jersey Division of Revenue.

Use the Taxpayer Identification Number listed above on all correspondence with the Divisions of Revenue and Taxation, as well as with the Department of Labor (if the business is subject to unemployment withholdings). Your tax returns and payments will be filed under this number, and you will be able to access information about your account by referencing it.

Additionally, please note that State law requires all contractors and subcontractors with Public agencies to provide proof of their registration with the Division of Revenue. The law also amended Section 92 of the Casino Control Act, which deals with the casino service industry.

We have attached a Proof of Registration Certificate for your use. To comply with the law, if you are currently under contract or entering into a contract with a State agency, you must provide a copy of the certificate to the contracting agency.

If you have any questions or require more information, feel free to call our Registration Hotline at (609)292-1730.

I wish you continued success in your business endeavors.

Sincerely,

John E. Tully, CPA
Director

STATE OF NEW JERSEY
BUSINESS REGISTRATION CERTIFICATE

DEPARTMENT OF TREASURY
DIVISION OF REVENUE
PO BOX 252
TRENTON, N J 08646-0252

TAXPAYER NAME:
GREENBAUM,ROWE,SMITH & DAVIS LLP

TRADE NAME:

ADDRESS:
99 WOOD AVE S-METRO CORP CAMPU
ISELIN NJ 08830-2712

SEQUENCE NUMBER:
0062733

EFFECTIVE DATE:
07/01/76

ISSUANCE DATE:
01/20/05

Director

FORM-BRC(08-01)

This Certificate is NOT assignable or transferable. It must be conspicuously displayed at above address.

CITY OF LONG BRANCH
Request for Qualifications
For Professional Service Contract

Notice is hereby given that, in accordance with N.J.S.A. 19:44-20.5, et seq, through a fair and open process, the City of Long Branch, County of Monmouth, State of New Jersey, is requesting sealed proposals/submissions for the following Professional Service(s):

Notice #FO-015-08
Date of Receipt of Proposal: Monday, June 30, 2008, at 2 pm prevailing time
Proposal for: Request for Qualifications-Legal Services Pool

Proposal/Submission packages are available at the Purchasing Office, 344 Broadway, Long Branch, NJ during normal business hours, or by calling 732-571-5656, or fax request to 732-222-1516. Sample proposal/submission package is also on file for viewing in the Office of the City Clerk.

Proposal/Submissions will be publicly opened and read by the Purchasing Agent, or designated representative, at Long Branch Municipal Building, Council Caucus Room, Second Floor, 344 Broadway, Long Branch, NJ, on the date and time noted above. Firms unable to be present for the opening of proposals may mail proposal package to the attention of the City Clerk at the above address.

Professional service contractors are required to comply with the requirements of N.J.S.A. 10:5-31 et seq, and N.J.A.C. 17:27 et seq., PL 2004, c.19, and Long Branch Pay to Play Ordinance.

Successful contractors will be required to provide, prior to award of the contract, their Affirmative Action documentation, New Jersey Business Registration (Form NJ BUS REG). Successful contractor will also be required to comply with all terms imposed by NJ Elections Laws subject to campaign funding limits, and with Long Branch Pay to Play Ordinance.

Proposals will be reviewed and award of contract will be based upon the following criteria:

- Experience and reputation of the firm in the field of municipal legal representation.
- Qualifications of the individuals who will perform the required services, and their respective participation.
- Experience of the individuals as it relates to the particular expertise required to perform the contract.
- Ability of the firm to perform the services on a timely basis, including staffing and familiarity with the subject matter.
- Experience with or specific knowledge the City of Long Branch as it pertains to this contract.
- References
- Cost consideration, including, but not limited to fee schedule to be charged, fees paid by public entities of similar size and make-up, for comparable level of services, and if applicable, cost that would be incurred by the City to contract with a new firm (i.e. estimated cost for current firm to review and close out all files, and new firm to review and get up to speed on all open files).

Successful candidates chosen from respondents will be issued open-ended master contracts, and, during the contract year of July 1, 2008 through June 30, 2009, may be requested to provide legal services as may be required by the City and assigned by the City Attorney. These contracts do not guarantee that any work will actually be awarded to any, or to all, of the successful candidates.

In the event that a member of the legal pool, due to a conflict of interest, should disqualify itself from consideration for a contract for a specific matter, that shall not adversely affect inclusion in the pool for consideration for future contracts during the contract year.

Contract assignments for specific matters will be awarded, on an as needed basis, to individual firms based upon experience and expertise as it applies to the specific content of the matter and the legal services required. Contract assignments will be awarded upon recommendation of the Department of Administration, with input from the City Attorney, and each contract will be authorized by issuance of a purchase order. No work may be authorized or services provided prior to the purchase order date.

Request for Qualifications for Legal Services

The City of Long Branch will receive qualifications from attorneys to provide legal services in matters as assigned by the City Attorney. The legal services that may be required could include, but are not limited to, general legal services, municipal Liquor License and Taxi Cab License matters, municipal property tax appeals, municipal tax foreclosure sales, In Rem tax foreclosure sales, real estate transactions as to sale or purchase of municipal property, redevelopment matters, redevelopment condemnations, COAH Round 3 rules and compliance matters, litigation involving violation of Zoning Ordinances, failure to comply with permits, failure to obtain Certificates of Occupancy, Construction Board of Appeals violations, other types of litigation, and other legal matters as may be required during the contract year.

Qualifications submission must include all of the following:

1. Name, address, phone and fax number of firm. (if multiple office sites, list all, and indicate corporate office).

2. Biography or history of the firm; staffing (i.e. number of attorneys, paralegal, and clerical staff).

3. List of principals and/or partners.

4. List of attorneys in the firm, including a summary of their educations, qualifications, expertise and experience as it relates to the various areas of legal services the City may require. The principals or partners that would be assigned to Long Branch must have a minimum of 10 years experience in New Jersey municipal law.

5. List of References from at least 2 municipalities for which the firm has provided similar services, including name, address, phone and contact information.

6. Provide prior experience, if any, the firm may have providing services to the City of Long Branch, and in what capacity.

7. List of municipalities currently under contract with the firm.

8. Provide a fee schedule by title for all firm members and employees. Indicate which fees would apply for attorneys and employees assigned to Long Branch matters.

9. Provide a schedule of any and all other fees routinely charged by the firm for during the course of providing legal services.

10. Copy of current Certificate of Insurance for Professional Liability Insurance coverage.

One original and four (4) photocopies of the submission package must be submitted to the City for consideration. In addition to the above required information, legal firms must provide all documents indicated on the Submission Package Check List. Failure to provide all required documents may result in the proposal not being considered.

Additional Pay to Play Requirements

Contractors are advised of the responsibility to file an annual disclosure statement on political contributions with the New Jersey Election Enforcement Commission, pursuant to N.J.S.A. 19:44-20.13 (P.L. 2005, c, 271, s.3), if the contractor receives contracts in excess of $50,000 in the aggregate from public entities in a calendar year. It is the contractor's responsibility to determine if filing is necessary. The report is due March 30 of each subsequent year for reporting for prior year contracts. Additional information on this requirement is available from ELEC at 888-313-3532 or at www.elec.state.nj.us.

STATE OF NEW JERSEY
ELECTION LAW ENFORCEMENT COMMISSION

Pay-To-Play

Filing Confirmation

Thank you for filing electronically.

The Commission has received the following report: Pay to Play 2006.pdf

Confirmation number : 20063001390

Business Entity Name : Greenbaum Rowe Smith & Davis LLP

Filing Year : 2006

The information was received on : 09/28/2007

Please print this page for your records.

©2007 State of New Jersey
New Jersey Election Law Enforcement Commission, P.O. Box 185, Trenton, NJ 08625-0185
Tel. (609) 292-8700 or Toll Free within NJ 1-888-313-ELEC (3532)

CITY OF LONG BRANCH, MUNICIPAL BUILDING, 344 BROADWAY, LONG BRANCH, N.J. 07740 (732) 571-5645

Howard H. Woolley, Jr
Business Administrator

TO: Council Members

FROM: Howard H. Woolley, Jr.
Business Administrator

RE: Contract for Legal Services Pool

DATE: July 2, 2008

After examining the proposals submitted to the City of Long Branch for Legal Services, it is the recommendation of the Mayor and Business Administrator to award a contract for legal services for the term of July 1, 2008 through June 30, 2009 to:

Greenbaum, Rowe, Smith & Davis, LLP
McKenna, Dupont, Higgins & Stone, PC
DiFrancesco, Bateman, Coley, Yospin, Kunzman, Davis & Lehrer
Mark R. Aikins, LLC
Maxwell Colby, Esquire

Based upon prior history, the City of Long Branch has determined that the above referenced attorneys have the experience, expertise and resources to provide the services required by the City of Long Branch.

HHW:gb

AGREEMENT
THIS AGREEMENT MADE THIS DAY OF

BETWEEN:

CITY OF LONG BRANCH
344 Broadway
Long Branch, NJ 07740

Hereinafter called the CITY

AND

MCKENNA, DUPONT, HIGGINS & STONE
229 Broad Street
PO Box 610
Red Bank, NJ 07701

WITNESSETH:

WHEREAS, the City of Long Branch is desirous of retaining McKenna, DuPont, Higgins & Stone to provide legal services to aid the City; and

NOW, THEREFORE, in consideration for the execution of this Agreement and the supplying of services hereunder, the parties agree as follows:

1. This contract is awarded as an open-ended contract. During the term of the contract, a purchase order will be issued, with a not to exceed value, to authorize work for specific matters. No services are to be provided by the contractor prior to the date of the purchase order; further, the contractor may not provide services, nor bill for services, for costs exceeding the amount of the purchase order. It is the Contractor's responsibility to notify the City prior to providing services if there are insufficient funds left on a specific purchase order, and the insure that an amended or new purchase order has been issued by the City.

Contractor is required to bill for services on a monthly basis, at hourly rates as specified in its proposal. Bills are to be forwarded to the City Finance Office no later that twenty-one calendar days after the end of the calendar month, or the date of the contractor's monthly billing cycle.

2. McKenna, DuPont, Higgins & Stone agrees to provide services.

3. Contractor will submit billing and vouchers on a monthly basis.

4. The term of said contract shall be to June 30, 2009.

5. The City will not honor any of your invoices that exceed the contract amount unless, prior to you or your firm exceeding that amount you notify the City so that an amendment to your contract can be considered by the Mayor and Council, and, if appropriate, approved.

Due to the number of professional service contractors the City deals with, it is important for each contractor to recognize the limit of their contract, and advise the City Administrator and City Attorney of the need to continue service with an amendment to the contract.

The Administrator and Attorney would then make the appropriate recommendation to the City Council based upon the facts and circumstances, as they exist at that time.

However, please understand that this application must be made In advance of providing any services the cost of which would exceed the contract amount, and only after having an amended contract approved by resolution of City Council will you be

authorized to proceed.

6. The Contractor certifies it complies with Affirmative Action regulations. During the performance of this contract, the contractor agrees as follows:

The contractor or subcontractor, where applicable will not discriminate against any employee or applicant for employment because of age, race, creed, color, national origin, ancestry, marital status, affectional or sexual orientation, or sex. Except with respect to affectional or sexual orientation, the contractor will take affirmative action to ensure that such applicants are recruited and employed, and that employees are treated during employment, without regard to their age, race, creed, color, national origin, ancestry, marital status, affectional or sexual orientation or sex. Such action shall include, but not be limited to the following: employment, upgrading, demotion, or transfer; recruitment or recruitment advertising; layoff or termination; rates of pay or other
forms of compensation; and selection for training including apprenticeship. The contractor agrees to post in conspicuous places, available to employees and applicants for employment, notices to be provided by the Public Agency Compliance Officer, setting forth provisions of this non-discrimination clause.

The contractor or subcontractor, where applicable, will, in all solicitations or advertisements for employees placed by or on behalf of the contractor, state that all qualified applicants will receive consideration for employment without regard to their age, race, creed, color, national origin, ancestry, marital status, affectional or sexual orientation or sex.

The contractor or subcontractor, where applicable, agrees to comply with any regulations promulgated by the Treasurer pursuant to NJSA 10:5-36 et. seq. as amended and supplemented from time to time and the Americans with

Disabilities Act.

The contractor or subcontractor agrees to make good faith efforts to employ minority and women workers consistent with the applicable county employment goals established in accordance with NJAC 17:275.2, or a binding determination of the applicable county employment goals determined by the Division, pursuant to NJSA 17:275.2.

The contractor or subcontractor agrees to inform in writing it's appropriate recruitment agencies including, but not limited to, employment agencies, placement bureaus, colleges, universities, labor unions that it does not discriminate on the basis of age, creed, color, national origin, ancestry, marital status, affectional or sexual orientation or sex, and that it will discontinue the use of any recruitment agency which engages in direct or indirect discriminatory practices. The contractor or subcontractor agrees to revise any of its testing procedures, if necessary, to assure that all personnel testing conforms with the principals of job related testing, as established by the statutes and court decisions of the state of New Jersey and as established by applicable federal law and applicable federal court decisions.

In conforming with the applicable employment goals, the contractor or subcontractor agrees to review all procedures relating to transfer, upgrading, down grading and layoff to ensure that all such actions are taken without regard to age, creed, color, national origin, ancestry, marital status, sex, affectional or sexual orientation, and conform with the applicable employment goals, consistent with the statutes and court decisions of the state of New Jersey, and applicable federal law and applicable Federal court decisions.

The contractor and its subcontract shall furnish such reports or other documents to the Division of contract compliance and EEO as maybe requested by the office from time to time in order to carry out the purposes of these regulations, and public agency shall furnish information as may be requested by the Division of Contract Compliance and EEO for conducting a compliance investigation pursuant to subchapter 10 of the administrative code of NJAC17:27.

A contractor. subcontractor or supplier who fails to provide proof of business registration or provides false business registration information shall be liable to a penalty or $25 for each day of violation, not to exceed $50,000 for each business registration not properly provided or maintained under a contract with the contracting agency. Information of the law and its requirements is available by calling (609) 292-9292.

7. The City shall publish notice of said award of this agreement in the legal ad section of its official newspaper, and shall have on file for public inspection a copy of this contract and authorizing resolution as prescribed by law.

8. "The contractor, in executing this contract document, acknowledges that it complies with City Ordinance # 18-05, annexed hereto, and New Jersey ELEC laws, rules and regulations, and has not given any political contribution that would bar it from being awarded this contract."

9. Contractor is advised that the responsibility to file an annual disclosure statement on political contributions with the New Jersey Election Enforcement commission pursuant to N.J.S.A. 19:44A-20.3 (P .L. 205, c, 271, s.3), if the contractor receives contracts in excess of

$50,000 from public Entities in a calendar year. It is the contractor's responsibility to determine if filing is necessary. Additional information on this requirement is available from ELEC at 888-313-3532 or at www.elec.state.ni.us.

10. This Contract shall be binding upon the City has caused this instrument to be signed by ADAM SCHNEIDER, MAYOR attested by IRENE A. JOLINE, CLERK and the Municipal Seal to be hereunto affixed and the CONTRACTOR hereunto set their hand and seals, or caused these presents to be signed by their proper corporate officers and their proper corporate seal to be hereto affixed, the day and year first above mentioned.

ATTEST:

CITY OF LONG BRANCH

_____

Irene A. Joline, City Clerk

_____

Adam Schneider, Mayor

ATTEST:

BY:

_____

_____

McKENNA, Du PONT, HIGGINS & STONE

A PROFESSIONAL CORPORATION
ATTORNEYS AT LAW

229 BROAD STREET
P.O. BOX 610
RED BANK, NEW JERSEY 07701
TELEPHONE (732) 741-6681
TELEFAX (732) 576-1787
mdhs@redbanklaw.com
http:\\www.redbanklaw.com

EDWARD J. McKENNA, JR.*
MICHAEL R. Du PONT*
KERRY E. HIGGINS
JENNIFER STONE HALL*
EDWARD G. WASHBURNE
* Member of N.J., N.Y. & WASH D.C. Bar
* Member of N.J. & N.Y. Bar

BENEDICT R. NICOSIA
Of Counsel

CLAY CONSTANTINOU
Of Counsel

June 23, 2008

Office of City Clerk
CITY OF LONG BRANCH
344 Broadway
Long Branch, NJ 07740

Re: **Request for Qualifications for Professional Services as Special Counsel**

Dear Sir/Madam:

Please accept this response to the Request for Qualifications for a Professional Service Contract, on behalf of the law firm of McKenna, DuPont, Higgins & Stone. Our firm has been offering quality services to clients and municipalities for over thirty (30) years. The lawyers in our firm have vast experience in Municipal Law, Tort and Personal Injury law and have served as Defense Attorney for governmental entities for many years.

Attached hereto are the resumes of the attorneys in the firm. As is evident, each attorney is well qualified and experienced and the firm and its attorneys have represented the municipalities in various capacities. Currently, Michael DuPont represents the Borough of Bradley Beach, Kerry Higgins represents the Borough of Freehold, Edward McKenna is an Assistant Middlesex County Counsel and the former Law Director for the Borough of Tinton Falls and the attorneys are Special Counsel for the Eatontown Sidewalk Improvement Project and handle Ocean Township Tax Appeals. We have represented municipalities through the MMJIF, in workers compensation actions as well as tort actions, and are presently under Contract with the City of Long Branch as Special Counsel.

In furtherance of the RFQ, please accept the following:

1. Contact Information

McKenna, DuPont, Higgins & Stone
229 Broad Street
P.O. Box 610
Red Bank, NJ 07701

Michael R. DuPont, Esquire (Preparer of Proposal)
Phone: 732-741-6681
Fax: 732-576-1787
Direct email: dupont@redbanklaw.com

2. The firm hereby accepts the fee schedule as promulgated by the City of Long Branch.

3. The following staff may be assigned to the engagement in the event the firm is selected: (All resumes for the following are attached)

Edward J. McKenna, Jr., Esquire
Michael R. DuPont, Esquire
Kerry E. Higgins, Esquire
Jennifer Stone Hall, Esquire
Edward G. Washburne, Esquire

Michael R. DuPont, Esquire, would be the individual responsible for all services required under the engagement.

4. In accordance with Affirmative action Law, P.L. 1975/c. 127 (N.J.A.C. 17:27), respondent acknowledges and agrees that, if retained, respondent will submit individual employer certifications and numbers or complete the Affirmative Action employee information report (form AA-302).

5. Attached please find our Firm's Business Registration Certificate, issued by the State of New Jersey.

6. Enclosed herein please find the executed Insurance Requirement Acknowledgement Form.

7. The firm has provided services for the Monmouth Municipal Joint Insurance Fund for many years, including respondent's work in worker's compensation and defense of municipalities in tort claim actions. The firm has also provided services in condemnation cases to Middlesex County as Assistant Middlesex County Counsel.

8. The firm has five (5) experienced attorneys and fifteen (15) support staffers, who can provide services.

9. All services would be performed at the main office at 229 Broad Street in Red Bank, New Jersey.

10. The Firm references are as follows:

a. Richard T. O'Connor, Esquire
O'CONNOR & O'CONNOR
509 Stillwells Corner Road
Freehold, NJ 07728

b. Kenneth E. Pringle, Esquire
PRINGLE QUINN & ANZANO
701 Seventh Avenue
Belmar, NJ 07719

c. Robert Glidersleeve, President
H&M International Transportation, Inc.
75 County Road
Jersey City, NJ 07307

d. Phyllis A. Quixley, Borough Administrator
Borough of Bradley Beach
701 Main Street
Bradley Beach, NJ 07720

Should you have additional questions or require additional information, please do not hesitate to contact the undersigned.

Thank you for your consideration.

Very truly yours,

MICHAEL R. DuPONT
Direct email: dupont@redbanklaw.com

mam
enclosures
cc Carol Mellaci, Purchasing Agent

STOCKHOLDER DISCLOSURE CERTIFICATION

Name of Business: McKenna, DuPont, Higgins & Stone

I hereby certify that McKenna, DuPont, Higgins & Stone is a corporation in the State of New Jersey and that the list below contains the names and homes addresses of all stockholders holding 10% or more of the issued and outstanding stock of McKenna, DuPont, Higgins & Stone.

Stockholders:

Edward J. McKenna, Jr.
36 Buena Place
Red Bank, NJ 07701

Michael R. DuPont
87 South Street
Red Bank, NJ 07701

McKENNA, DuPONT, HIGGINS & STONE

By: _____
Michael R. DuPont, Partner

Subscribed and sworn before me this 23 day of June 2008.

_____
NOTARY PUBLIC

MIRIAM A. MCMANUS
A Notary Public of New Jersey
My Commission Expires FEBRUARY 26, 2012

NON-COLLUSION AFFIDAVIT

STATE OF NEW JERSEY
ss
COUNTY OF MONMOUTH

I, MICHAEL R. DuPONT, residing in the Borough of Red Bank, in the County of Monmouth and State of New Jersey of full age, being duly sworn according to law on my oath dispose and say that:

I, am a Partner of the firm of McKenna, DuPont, Higgins & Stone, the bidder making this Proposal for the bid proposal entitled Professional Service Contract and that I executed the said proposal with full authority to do so, that said bidder has not, directly or indirectly entered into any agreement, participated in any collusion, or otherwise taken any action in restraint of free, competitive bidding in connection with the above named project; and that all statements contained in said proposal and in this affidavit are true and correct, and made with full knowledge that the City of Long Branch relies upon the truth of the statements contained in said Proposal, and in the statements contained in this affidavit, in awarding the contract for the said project.

I further warrant that no person or selling agency has been employed or retained to solicit or secure such contract upon an agreement or understanding for a commission, percentage, brokerage, or contingent fee, except bona fide employees or bona fide established commercial or selling agencies maintained by McKenna, DuPont, Higgins & Stone.

Michael R. DuPont

Subscribed and sworn to
before me this 2nd day
of June, 2008.

NOTARY PUBLIC

MIRIAM A. MCMANUS
A Notary Public of New Jersey
My Commission Expires FEBRUARY 26, 2012

CITY OF LONG BRANCH
LABOR /EMPLOYMENT LAW COUNSEL SERVICES
INSURANCE REQUIREMENTS & ACKNOWLEDGMENTS

Certificate(s) of Insurance shall be filed with the City of Long upon award of contract by the City of Long Branch.

The minimum amount of insurance to be carried by the Professional Service Entity shall be as follows:

PROFESSIONAL LIABILITY INSURANCE

Limits shall be a minimum of $500,000.000 for each claim and $500,000.00 aggregate each policy period.

Acknowledgment of Insurance Requirement:

Michael R. DuFont, Esq.
Partner for the Firm

6/22/08
Date:

REQUIRED EVIDENCE
AFFIRMATIVE ACTION REGULATION
P.L. 1975, C. 127 (N.J.A.C. 17:27)

If awarded a contract, all procurement and service contractors will be required to comply with the requirements of P.L. 1975, c. 127, (N.J.A.C. 17:27). Within seven (7) days after receipt of the notification of intent to award the contract or receipt of the contract, whichever is sooner, the contractor should present one of the following to the Purchasing Agent.

1. **A photocopy of a valid letter from the U.S. Department of Labor that the contractor has an existing federally-approved or sanctioned Affirmative Action Plan (good for one year from the date of the letter).**

   OR

2. **A photocopy of approved Certificate of Employee Information Report from the State of New Jersey.**

   OR

3. **An Affirmative Action Employee Information Report (Form AA302).**

   OR

4. **All successful construction contractors must submit, within three days (3) of the signing of the contract, an Initial Project Manning Report (AA201) for any contract award that meets or exceeds the Public Agency bidding threshold (available upon request).**

NO FIRM MAY BE ISSUED A CONTRACT UNLESS IT COMPLIES WITH THE AFFIRMATIVE ACTION REGULATIONS OF P.L. 1975, C. 127.

The following questions must be answered by all bidders:

1. **Do you have a federally-approved or sanctioned Affirmative Action Program?**

   X Yes ___No If yes, please submit copy of such approval.

2. **Do you have a Certificate of Employee Information Report Approval?**

   X Yes ___No If yes, please submit copy of such certificate.

The undersigned contractor certifies that he is aware of the commitment to comply with the requirements of P.L. 1975, c. 127, and agrees to furnish the required documentation pursuant to law.

COMPANY: McKenna, DuPont, Higgins & Stone

SIGNATURE: _____

TITLE: Michael R. DuPont, Partner

NOTE: A CONTRACTOR'S BID MUST BE REJECTED AS NON-RESPONSIVE IF A CONTRACTOR FAILS TO COMPLY WITH REQUIREMENTS OF P.L.1975, C. 127, WITHIN THE REQUIRED TIME FRAME.

POLITICAL CONTRIBUTION AFFIDAVIT

STATE OF NEW JERSEY
ss:
COUNTY OF MONMOUTH

I, MICHAEL R. DuPONT, ESQUIRE, residing in the Borough of Red Bank, in the County of Monmouth and State of New Jersey of full age, being duly sworn according to law on my oath depose and say that:

I am a Partner in the firm of McKenna, DuPont, Higgins & Stone, a professional firm intending to do business with the City of Long Branch, and I hereby certify that the firm is in full compliance with Long Branch Ordinance #18-05, entitled "An Ordinance Requiring Public Contracting Reform", annexed hereto, that the firm has not given any political contribution that would bar it from entering into contract with the City of Long Branch, and further, for the life of the contract, will adhere to the requirements of Ordinance #18-05 relative to future donations.

McKENNA, DuPONT, HIGGINS & STONE

By: _____
Michael R. DuPont, Partner

Subscribed and sworn to
before me this 23 day of
June 2008.

_____
NOTARY PUBLIC

MIRIAM A. MCMANUS
A Notary Public of New Jersey
My Commission Expires FEBRUARY 26, 2012

Edward J. McKenna, Jr.

229 Broad Street • Red Bank, NJ 07701 • (732) 741-6681

Education

Fordham University School of Law
Juris Doctor, 1975

Harvard Law School
Post-graduate

Villanova University
Bachelor of Science in Business Administration, Major in Accounting, 1972

Professional Experience

McKenna, Du Pont, Higgins & Stone, Red Bank, NJ 1980 – Present
Senior partner in a practice that represents more than fifty financial institutions, primarily federal credit unions, numerous municipalities as well as Planning & Zoning Boards, numerous businesses, major developers, and hundreds of private clients.

Legal Appointments

- New Jersey Supreme Court Meditation Panelist, 2000-Present.
- Arbitrator for the American Arbitration, 1982-Present. Arbitrated and mediated hundreds of cases in diverse areas including labor and employment law, personal injury, construction law, and contract law.
- Blue Ribbon Panelist for the Superior Court of New Jersey on family law matters, 1982-Present.
- Former Medical Malpractice Panelist for the Superior Court.
- Former Member of the Board of Trustees of the Monmouth Bar Association, 1986-1997. Chaired several committees, held all officer positions, and served as President from 1996 to 1997.
- Member of the New Jersey Supreme Court Ethics Committee for District IX, 1985-1989. Served as Chairman, 1989.
- Past board member, Legal Aid Society of Monmouth County and Ocean-Monmouth Legal Services.
- Lectured extensively on credit union law and employment law. Guest speaker on many statewide panels.

Government Appointments

- State Planning Commission

Bar Admissions

State of New Jersey
State of New York
District of Columbia
United States Supreme Court
United States Third Circuit Court of Appeals
United States Court of Appeals for the District of Columbia
United States Claims Court
United States Tax Court

Edward J. McKenna, Jr.

Public Service

Borough of Red Bank 1990 – 2006
Mayor
Initiated a new and innovative philosophy and methodology of conducting government business. Employed Sophisticated business management practices to increase the borough's financial position, promote commerce, and create a thriving business district.

Created a business improvement district in 1991 that is now ranked as one of the top SID's in New Jersey. Reduced downtown vacancy rate from 35% to less than 1%.

Served as chairman of the Master Plan Review Committee. Received numerous county planning awards for drafting a revolutionary master plan. Serves as a mediator for the State of New Jersey Supreme Court since 2000, served as an arbitrator for the American Arbitration Association since 1982. Regularly retained privately to serve as both a mediator and arbitrator.

Successful in obtaining approximately $15 million in state and federal funds for borough and private projects.

Oversaw development of new Borough Hall, new senior citizen center, and an award-winning waterfront park.

During administration, Red Bank has been designated as a Regional Center by the Office of State Planning, qualifying as a priority for state funding for special improvements and projects. The borough has been cited by a number of publications, including the *New York Times, The New York Post, The Washington Post, The Baltimore Sun, Smithsonian Magazine,* and *New Jersey Magazine*, as one of the best examples of the renaissance of a city.

Co-founded and currently serve as chairman of the Two River Council of Mayors, a group of 13 mayors who network to share ideas on minimizing taxes and optimizing services to their communities. Serves as a member of the Red Bank Planning Board since the year 1989, first as Council Representative to the Planning Board and subsequently as Mayor which Board Membership continues through the present time.

Prior Positions:

- Councilman, Red Bank Borough Council, 1986-1990.
- Red Bank Parks & Recreation Committee, 1976-1980, Instrumental in the renovation and redesign of Red Bank's main waterfront park.
- Member of the Red Bank Zoning Board of Adjustment, 1978-1981.

Edward J. McKenna, Jr.

Honors/Awards

- First recipient of the Spinnaker Award as *Elected Official of the Year* from the Eastern Monmouth Area Chamber of Commerce, 1992
- *Joshua Huddy Distinguished Citizen* award, 1998
- *Citizen of the Year* award from the Red Bank Rotary Club
- *Dr. Esther H. Chang Founder Father's* award from the American Cancer Society
- *Morris Miller Americanism* award from the Jewish War Veterans of the U.S.A.
- Two Certificates of Special Recognition from the United States Congress
- *Alumnus of the Year* by the Christian Brothers Academy, 2000
- Named *Planning Official of the Year* by the New Jersey Planning Officials, 2001
- Community YMCA – *Community Leadership Award*
- 180 (formerly Women's Center of Monmouth County) – *Family Volunteer of the Year Award,* 2002
- Monmouth/Ocean Food Bank, Humanitarian of the Year, 2002
- Muscular Dystrophy Association – *Lou Gehrig Humanitarian of the Year Award*, 2003

Community Affiliations

- Member of Board of Directors of the Children's Cultural Center at Red Bank, 1996 -
- Trustee of the Alliance of Neighbors of Monmouth County, 2001- 2005
- Former member of the Board of Directors for the Monmouth County Arts Council, 1996-1998
- Former member of the Board of Trustees for the American Heart Association
- Former member of the Board of Directors of Catholic Charities of the Diocese of Trenton
- Member of Governor James E. McGreevy's Transition Team
- Featured in Money Magazine, January 2002
- Numerous radio, television, and guest speaking appearances including "The Today Show," "Good Morning America," "20/20" and New Jersey League of Municipalities conferences – Downtown New Jersey Conferences
- Member of the New Jersey State Planning Commission, 2002 -
- Testified before the Senate Environment Committee, June 2002
- Testified before the Senate Appointments Committee, January 2006

MICHAEL R. DuPONT
87 SOUTH STREET
RED BANK, NEW JERSEY 07701
(Work) 732-741-6681
E-mail: dupont@redbanklaw.com

General Counsel for various Financial Institutions, Trucking and Transportation Companies. Responsible for overseeing all legal aspects of the entities operations throughout the country.

Developed legal policies, litigation strategies and oversight for the Board of Directors and Management.

WORK EXPERIENCE:

June 1985 - Present **McKenna, Dupont, Higgins & Stone, P.C.**
Partner
229 Broad Street, Red Bank, New Jersey 07701

FINANCIALINSTITUTIONS /CREDIT UNIONS: Responsible for:

(a) General Counsel, implementing various mortgage programs, attending and advising the board of directors concerning federal regulations, meeting with federal examiners to review the financial condition of the lending institution, revising and negotiating service contracts, real estate contracts, leases and employment contracts.
(b) Responsible for regulatory compliance and disclosures.

TRANSPORTATION COMPANIES: Responsible for:

(a) General Counsel for Transportation, Trucking and Railroad Company based in Jersey City, NJ involve in all business operations across the nation,
(b) Reviewed all business loan documents, negotiated and reviewed all leases for the company operations.

COMMERCIAL LITIGATION AND FORECLOSURES: Responsible for:

(a) Preparing commercial\residential Foreclosure complaints, notices of lies pendent, writs of executions, and final judgments;
(b) Negotiating with the federal and state taxing authorities concerning unpaid taxes;
(c) Assisting in workouts and refinancing;
(d) Preparing Stand Still Agreements, Forbearance Agreements.

PERSONAL INJURY AND WORKERS COMPENSATION:

Responsible for:

(a) Overseeing all of the firm's personal injury and workers compensation, litigation and trials.

BOROUGH ATTORNEY FOR VARIOUS MUNICIPALITIES:

(a) Appointed as Borough Attorney for Bradley Beach;
(b) Represented Borough of Tinton Falls, Keansburg Housing Authority, and Keansburg Planning Board in drafting contracts and municipal ordinances, attended authority meetings and counsel meetings, involved in litigation against the Municipality and transactions involving real estate;
(c) Responsible for handling Tax Appeals filed by residents and commercial businesses against Ocean Township;
(d) Appointed as Public Defender in Belmar, Sea Bright and Bradley Beach;
(e) Borough Attorney for Atlantic Highlands Harbor Commission.

NEW JERSEY TURNPIKE AUTHORITY:

Responsible for:

(a) Attending and overseeing the operations, management and control of the New Jersey Turnpike and the Garden State Parkway in the State of New Jersey;
(b) Responsible for assisting in setting policy and recommendations to the Law, Finance and Policy Committee, including, but not limited to, recommending global settlements, authorizing various ratifications of construction contracts, and issuance of orders for professional services;
(c) Provided authorization to enter into agreements with the New Jersey Department of Transportation and various municipalities.

EDUCATION:

May 1986	J.D. - The John Marshall Law School, Chicago, Ill.
September 1979-May 1980	Le Moyne College, Syracuse, N.Y.
January-May 1982	Loyola University of Rome, Rome, Italy
May 1983	B.A. - Loyola University, Chicago, Ill. Major: Political Science Minor: Business Administration

LICENSES:

December 1986	Admitted to the New Jersey State Bar
August 1992	Admitted to District of Columbia Bar

October 1996	Admitted to practice before US Supreme Court
September 2002	Admitted to the New York State Bar
October 2002	Rutgers University - Edward Bloustein School of Planning and Public Policy - Center for Government Services - Municipal Finance Certification

HONORS:

June 2006-Present	Appointed as Treasurer of the New Jersey Turnpike Authority
June 2005	Appointed as a Commissioner of the NJ Turnpike Authority by Governor Richard Codey
1995-Present	Member, Vice-Chair and Chair Borough of Red Bank Zoning Board of Adjustment
December 1995-Present	Mediator to the United States Bankruptcy Court for the Third District of the State of New Jersey.
October 1998 - 1999	Supreme Court of New Jersey, Disciplinary Oversight Committee
September 1998-Present	Supreme Court of New Jersey, Ethics Committee Fee Arbitration Committee
July 1992-1996	Member of the Supreme Court of New Jersey Ethics Committee - District IX
November 1993-1996	Arbitrator for American Arbitration Association
January 1995-1996	Trustee to the Monmouth County Bar Association
May 2001-May 2003	New Jersey State Bar Association Election Law Committee Chair
December 2001	Appointed to New Jersey Governor McGreevey's Commerce Department Transition Team
December 2001	Appointed to New Jersey Governor McGreevey's Transportation and Authority Transition Team

REFERENCES: Furnished upon request.

KERRY E. HIGGINS
McKenna, DuPont, Higgins & Stone, PC
229 Broad Street
Red Bank, New Jersey 07701
732-741-6681
khiggins@redbanklaw.com

EDUCATION:

1981-present - Continuing Legal Education with an emphasis on Municipal and Governmental Law, Real Estate, Zoning, Commercial Law and Litigation, Environmental Law, Probate, Civil Litigation and General Equity.

1981 - Villanova University School of Law
Villanova, Pennsylvania
Degree: Juris Doctor

1978 - Villanova University
Villanova, Pennsylvania
Degree: Bachelor of Arts in Political Science
Magna cum laude

EXPERIENCE:

1997 - present - McKenna, DuPont, Higgins & Stone, P.C.
229 Broad Street
Red Bank, New Jersey 07701
(732) 741-6681

Partner in general practice firm with experience in a variety of legal areas, including: municipal and government law, real estate, land use and zoning, including subdivision, site plan and use variance applications, environmental law, wills and estates, general equity and civil litigation including personal injury, negligence, contract and construction disputes. Former Municipal Prosecutor and Millstone Zoning Board attorney and current Freehold Borough Municipal Attorney and Sea Bright Planning/Zoning Board Attorney. Special counsel to the Borough of Eatontown for sidewalk improvement program. The firm served as Law Director for the Borough of Tinton Falls from 1996 to 2005.
Practice includes experience before Federal, State, Municipal and Administrative Courts, PERC and the Board of Public Utilities.

1985-1997 - Associate and Partner
Cerrato, Dawes, Collins, Saker & Brown, P.C.
509 Stillwells Corner Road

Freehold, New Jersey 07728
(908) 431-5000

Partner in general practice firm with experience in a variety of legal areas, including: municipal and government law, real estate, land use and zoning, wills. Estates and probate, environmental law, utility law, general equity and civil litigation including personal injury, negligence, product liability, contract and construction disputes.

Experience in government law including service as Freehold Borough Attorney from 1994 through the present. Worked directly with County Counsel and Assistant County Counsel 1985 through 1991. Served as Freehold Borough Prosecutor, 1992 through 1994. Practice included experience before Federal, State, Municipal and Administrative Courts, PERC and the Board of Public Utilities.

1983-1985 - Associate
Lomurro, Eastman and Collins
90 West Main Street
Freehold, New Jersey 07728
(908) 462-7170

Associate in a general practice firm. Experience included general civil litigation, estates, real estate, land use and zoning, quiet title actions, workers' compensation and personal injury, criminal and matrimonial. Practice in Municipal, State, Administrative and Federal Courts.

1982-1983 - Associate
Kenneth R. Smith, Jr.
76 West Main Street
Freehold, New Jersey 07728
(908) 462-2480

Associate in a general practice firm handling real estate, civil litigation, personal injury and estate matters.

ACTIVITIES AND PROFESSIONAL ASSOCIATIONS:

Involvement in Community Activities as follows:

* President, Monmouth Bar Association
* Member, Board of Trustees,
  CentraState Healthcare System 1994-1997
  Honorary Trustee, 1997 to present
* Member, Board of Trustees, CentraState Healthcare Foundation, 1985 to 1994; 2001 to 2007.
* Member, Board of Directors, Western Monmouth Chamber of Commerce, 1989 to 1991.

* Member, Board of Trustees, Battleground Historical Society, 1985-1988.
* Member, Board of Directors, New Jersey Tournament of Champions, 1984-1987.
* Member, New Jersey Bar Association; Monmouth Bar Association.
* Member, Western Monmouth Exchange Club, 1990 - 1997
* Member, Western Monmouth Chamber of Commerce

* Attorney, Senior Citizens Housing Corporation of Freehold Borough.

* Municipal Prosecutor, Borough of Freehold 1992-1994
* Attorney, Borough of Freehold 1994-present
* Attorney, Sea Bright Planning/Zoning Board 2000-present
* Attorney, Millstone Zoning Board 2003-2006

JENNIFER STONE HALL
229 Broad Street Red Bank NJ 07701 (732) 741-6681

EDUCATION

Rutgers University School of Law – Newark
Juris Doctor, 1998
Certificate in Conflict Management, 1998

New York University
Bachelor of Science, Double Major in Economics and Political Science, 1994

University of London
Studies in Architecture and Shakespeare, Summer 1993

PROFESSIONAL EXPERENCE

McKenna, DuPont, Higgins & Stone, Red Bank, NJ 1999-Present
Associate in the practice from 1999 -2004. Partner from 2004 to the present time. Practice primarily includes matrimonial, municipal, real estate and civil litigation. Former public defender for the Boroughs of Sea Bright and Bradley Beach. Current public defender for Belmar.

Superior Court of New Jersey, Monmouth County Courthouse, Freehold, NJ
Judicial clerk for the Honorable Florence R. Peskoe, P.J.S.C., Honorable Anthony J. Mellaci, Jr., J.S.C. and Honorable Norman J. Peer, J.S.C. 1998-1999

BAR ASSOCIATIONS

State of New Jersey
State of New York
United States District Court for the District of New Jersey

PROFESSIONAL MEMBERSHIPS

Member of the New Jersey District Ethics Committee for the Office of Attorney Ethics
Member of the Monmouth County Bar Association
Member of the New Jersey State Bar Association

EDWARD G. WASHBURNE

15 Madison Avenue
Red Bank, NJ 07701
(732) 266-8302

PROFESSIONAL EXPERIENCE:

Jan. 2006 to Nov. 2006

Law Office of Maria Noto, Matawan, NJ
Attorney
- Handled matters of complex civil and criminal litigation.

Sept. 1997 to Dec. 2005

Office of the County Prosecutor, Monmouth County, Freehold, NJ
Assistant Prosecutor
- 2002-2005: Director of Forfeiture Unit. Responsible for significant civil litigation related to seized assets.
- 1997-2002: Assigned to Trial Section. Successfully litigated serious, complex, high-profile cases including public corruption, homicide, and gang-related criminal activity.

Sept. 1987 to Sept. 1997

Office of the County Prosecutor, Essex County, Newark, NJ
Assistant Prosecutor
- Successfully litigated substantial white collar, public corruption, and violent crimes.
- Assigned to Special Prosecutions Unit by Prosecutor in recognition of litigation skills.
- Promoted to Supervisor of Professional Standards/Internal Affairs Unit.

1984 to 1987

Office of the Public Defender, Monmouth Region, Freehold, NJ
Assistant Deputy Public Defender
- Assigned to Adult Trial Division. Tried numerous cases including capital trials.

ADDITIONAL QUALIFICATIONS:

Instructor - *Monmouth County Police Academy,* Freehold, NJ
Instructor - *Essex County Police Academy,* Cedar Grove, NJ
Instructor - *Newark Police Academy,* Newark, NJ

EDUCATION:

University of North Dakota School of Law, Grand Forks, ND
Juris Doctor with Honors, 1983

Georgetown University, Washington, DC
M.A. in Political Science and International Relations, 1979

Sophia University, Tokyo, Japan
B.A. with Distinction in Political Science and International Relations, 1976

BAR ADMISSION:

State of New Jersey, 1983

Certification 22128

CERTIFICATE OF EMPLOYEE INFORMATION REPORT

RENEWAL

This is to certify that the contractor listed below has submitted an Employee Information Report pursuant to N.J.A.C. 17:27-1.1 et seq. and the State Treasurer has approved said report. This approval will remain in effect for the period of 15-NOV-2003 to 15-NOV-2010

MCKENNA, DUPONT, HIGGINS & BYRNES, P.C.
229 BROAD STREET
RED BANK NJ 07701

State Treasurer

STATE OF NEW JERSEY
BUSINESS REGISTRATION CERTIFICATE

Taxpayer Name:	MCKENNA, DUPONT, HIGGINS & STONE, P.C.
Trade Name:	
Address:	229 BROAD STREET RED BANK, NJ 07701
Certificate Number:	0071501
Effective Date:	March 23, 2006
Date of Issuance:	June 16, 2008

For Office Use Only:

20080616141928430

State of New Jersey

AFFIRMATIVE ACTION EMPLOYEE INFORMATION REPORT

IMPORTANT - READ INSTRUCTIONS ON PRIOR PAGE CAREFULLY BEFORE COMPLETING FORM. TYPE OR PRINT IN INK. FAILURE TO PROPERLY COMPLETE THE ENTIRE FORM MAY DELAY ISSUANCE OF YOUR CERTIFICATE.

SECTION A - COMPANY IDENTIFICATION

1. FID. NO. OR SOCIAL SECURITY: 22-2468808

2. TYPE OF BUSINESS: (●) 1. MFG. ( ) 2. SERVICE ( ) 3. WHOLESALE ( ) 4. RETAIL ( ) 5. OTHER

3. TOTAL NO. OF EMPLOYEES IN THE ENTIRE COMPANY: 22

4. COMPANY NAME: McKenna, DuPont, Higgins + Stone

5. STREET: 229 Broad St. CITY: Red Bank COUNTY: Monmouth STATE: NJ ZIP CODE: 07701

6. NAME OF PARENT OR AFFILIATED COMPANY (IF NONE, SO INDICATE): NONE CITY: STATE: ZIP CODE:

7. DOES THE ENTIRE COMPANY HAVE A TOTAL OF AT LEAST 50 EMPLOYEES? ( ) YES (●) NO

8. CHECK ONE: IS THE COMPANY: (●) SINGLE-ESTABLISHMENT EMPLOYER ( ) MULTI-ESTABLISHMENT EMPLOYER

9. IF MULTI-ESTABLISHMENT EMPLOYER, STATE THE NUMBER OF ESTABLISHMENTS IN N.J.: [ ]

10. TOTAL NUMBER OF EMPLOYEES AT THE ESTABLISHMENT WHICH HAS BEEN AWARDED THE CONTRACT: [ ]

11. PUBLIC AGENCY AWARDING CONTRACT: CITY: STATE: ZIP CODE:

OFFICIAL USE ONLY

DATE RECEIVED MO/DAY/YR	COUNTY	OUT OF STATE PERCENTAGES MINORITY	FEMALE	ASSIGNED CERTIFICATION NUMBER

SECTION B - EMPLOYMENT DATA

12. Report all permanent, temporary and part-time employees ON YOUR OWN PAYROLL. Enter the appropriate figures on all lines and in all columns. Where there are no employees in a particular category, enter a zero. Include ALL employees, not just those in minority categories, in columns 1, 2, & 3.

JOB CATEGORIES	ALL EMPLOYEES Col. 1 TOTAL (Cols. 2&3)	Col. 2 MALE	Col. 3 FEMALE	MINORITY GROUP EMPLOYEES (PERMANENT) MALE BLACK	HISPANIC	AMERICAN INDIAN	ASIAN	FEMALE BLACK	HISPANIC	AMERICAN INDIAN	ASIAN
Officials and Managers	1		1								
Professionals	5	3	2								
Technicians											
Sales Workers											
Office and Clerical	14		14								
Craftworkers (Skilled)											
Operatives (Semi-skilled)											
Laborers (Unskilled)											
Service Workers											
TOTAL											
Total employees from Previous Report (if any)											
Temporary and Part-time Employees	2		2								

The data below shall NOT be included in the request for the categories above.

13. HOW WAS INFORMATION AS TO RACE OR ETHNIC GROUP IN SECTION B OBTAINED? ( ) 1. VISUAL SURVEY ( ) 2. EMPLOYMENT RECORD ( ) 3. OTHER (SPECIFY BELOW)

14. DATES OF PAYROLL PERIOD USED

15. IS THIS THE FIRST EMPLOYEE INFORMATION REPORT (AA.302) SUBMITTED? (●) 1. YES ( ) 2. NO

16. IF NO, DATE OF LAST REPORT SUBMITTED | MO. | DAY | YEAR |

SECTION C - SIGNATURE AND IDENTIFICATION

17. NAME OF PERSON COMPLETING FORM (PRINT OR TYPE) (CONTRACTOR EEO OFFICER): DEBORAH KOESE SIGNATURE: Deborah Koese TITLE: Legal Adm | MO. 1 | DAY 4 | YEAR 08 |

18. ADDRESS (NO. & STREET): 229 Broad St. (CITY): Red Bank (STATE): NJ (ZIP CODE): 07701 PHONE (AREA CODE, NO. & EXTENSION): 732-741-6681 X27

FORM AA302

AFFIRMATIVE ACTION SUPPLEMENT

AFFIRMATIVE ACTION	TERM CONTRACT - ADVERTISED BID PROPOSAL
DEPT OF THE TREASURY DIVISION OF PURCHASE & PROPERTY STATE OF NEW JERSEY 33 WEST STATE STREET, 9TH FLOOR PO BOX 230 TRENTON, NEW JERSEY 08625-0230	BID NUMBER: NAME OF BIDDER: McKENNA, DuPONT, HIGGINS & STONE 229 BROAD STREET P.O. BOX 610 RED BANK, NEW JERSEY 07701-0610

SUPPLEMENT TO BID SPECIFICATIONS

DURING THE PERFORMANCE OF THIS CONTRACT, THE CONTRACTOR AGREES AS FOLLOWS:

1. THE CONTRACTOR OR SUBCONTRACTOR, WHERE APPLICABLE, WILL NOT DISCRIMINATE AGAINST ANY EMPLOYEE OR APPLICANT FOR EMPLOYMENT BECAUSE OF AGE, RACE, CREED, COLOR, NATIONAL ORIGIN, ANCESTRY, MARITAL STATUS, SEX, AFFECTIONAL OR SEXUAL ORIENTATION. THE CONTRACTOR WILL TAKE AFFIRMATIVE ACTION TO ENSURE THAT SUCH APPLICANTS ARE RECRUITED AND EMPLOYED, AND THAT EMPLOYEES ARE TREATED DURING EMPLOYMENT, WITHOUT REGARD TO THEIR AGE, RACE, CREED, COLOR, NATIONAL ORIGIN, ANCESTRY, MARITAL STATUS, SEX, AFFECTIONAL OR SEXUAL ORIENTATION. SUCH ACTION SHALL INCLUDE, BUT NOT BE LIMITED TO THE FOLLOWING: EMPLOYMENT, UPGRADING, DEMOTION, OR TRANSFER; RECRUITMENT OR RECRUITMENT ADVERTISING; LAYOFF OR TERMINATION; RATES OF PAY OR OTHER FORMS OF COMPENSATION; AND SELECTION FOR TRAINING, INCLUDING APPRENTICESHIP. THE CONTRACTOR AGREES TO POST IN CONSPICUOUS PLACES, AVAILABLE TO EMPLOYEES AND APPLICANTS FOR EMPLOYMENT, NOTICES TO BE PROVIDED BY THE PUBLIC AGENCY COMPLIANCE OFFICER SETTING FORTH PROVISIONS OF THIS NONDISCRIMINATION CLAUSE;

2. THE CONTRACTOR OR SUBCONTRACTOR, WHERE APPLICABLE WILL, IN ALL SOLICITATIONS OR ADVERTISEMENTS ,FOR EMPLOYEES PLACED BY OR ON BEHALF OF THE CONTRACTOR, STATE THAT ALL QUALIFIED APPLICANTS WILL RECEIVE CONSIDERATION FOR EMPLOYMENT WITHOUT REGARD TO AGE, RACE, CREED, COLOR, NATIONAL ORIGIN, ANCESTRY, MARITAL STATUS, SEX, AFFECTIONAL OR SEXUAL ORIENTATION.

3. THE CONTRACTOR OR SUBCONTRACTOR, WHERE APPLICABLE, WILL SEND TO EACH LABOR UNION OR REPRESENTATIVE OF WORKERS WITH WHICH IT HAS A COLLECTIVE BARGAINING AGREEMENT OR OTHER CONTRACT OR UNDERSTANDING, A NOTICE, TO BE PROVIDED BY THE AGENCY CONTRACTING OFFICER ADVISING THE LABOR UNION OR WORKERS' REPRESENTATIVE OF THE CONTRACTOR'S COMMITMENTS UNDER THIS ACT AND SHALL POST COPIES OF THE NOTICE IN CONSPICUOUS PLACES AVAILABLE TO EMPLOYEES AND APPLICANTS FOR EMPLOYMENT.

4. THE CONTRACTOR OR SUBCONTRACTOR, WHERE APPLICABLE, AGREES TO COMPLY WITH THE REGULATIONS PROMULGATED BY THE TREASURER PURSUANT TO P.L. 1975, C. 127,AS AMENDED AND SUPPLEMENTED FROM TIME TO TIME AND THE AMERICANS WITH DISABILITIES ACT.

5. THE CONTRACTOR OR SUBCONTRACTOR AGREES TO ATTEMPT IN GOOD FAITH TO EMPLOY MINORITY AND FEMALE WORKERS CONSISTENT WITH THE APPLICABLE COUNTY EMPLOYMENT GOALS PRESCRIBED BY N.J.A.C. 17:27-5.2 PROMULGATED BY THE TREASURER PURSUANT TO P.L. 1975, C. 127, AS AMENDED AND SUPPLEMENTED FROM TIME TO TIME OR IN ACCORDANCE WITH A BINDING DETERMINATION OF THE APPLICABLE COUNTY EMPLOYMENT GOALS DETERMINED BY THE AFFIRMATIVE ACTION OFFICE PURSUANT TO N.J.A.C. 17:27-5.2 PROMULGATED BY THE TREASURER PURSUANT TO P.L. 1975, C. 127, AS AMENDED AND SUPPLEMENTED FROM TIME TO TIME.

6. THE CONTRACTOR OR SUBCONTRACTOR AGREES TO INFORM IN WRITING APPROPRIATE RECRUITMENT AGENCIES IN THE AREA, INCLUDING EMPLOYMENT AGENCIES, PLACEMENT BUREAUS, COLLEGES, UNIVERSITIES, LABOR UNIONS, THAT IT DOES NOT DISCRIMINATE ON THE BASIS OF AGE, CREED, COLOR, NATIONAL ORIGIN, ANCESTRY, MARITAL STATUS, SEX, AFFECTIONAL OR SEXUAL ORIENTATION, AND THAT IT WILL DISCONTINUE THE USE OF ANY RECRUITMENT AGENCY WHICH ENGAGES IN DIRECT OR INDIRECT DISCRIMINATORY PRACTICES.

7. THE CONTRACTOR OR SUBCONTRACTOR AGREES TO REVISE ANY OF ITS TESTING PROCEDURES, IF NECESSARY, TO ASSURE THAT ALL PERSONNEL TESTING CONFORMS WITH THE PRINCIPLES OF JOB-RELATED TESTING, AS ESTABLISHED BY THE STATUTES AND COURT DECISIONS OF THE STATE OF NEW JERSEY AND AS ESTABLISHED BY APPLICABLE FEDERAL LAW AND APPLICABLE FEDERAL COURT DECISIONS.

8. THE CONTRACTOR OR SUBCONTRACTOR AGREES TO REVIEW ALL PROCEDURES RELATING TO TRANSFER, UPGRADING, DOWNGRADING AND LAYOFF TO ENSURE THAT ALL SUCH ACTIONS ARE TAKEN WITHOUT REGARD TO AGE, CREED, COLOR, NATIONAL ORIGIN, ANCESTRY, MARITAL STATUS, SEX, AFFECTIONAL OR SEXUAL ORIENTATION, AND CONFORM WITH THE APPLICABLE EMPLOYMENT GOALS, CONSISTENT WITH THE STATUTES AND COURT DECISIONS OF THE STATE OF NEW JERSEY, AND APPLICABLE FEDERAL LAW AND APPLICABLE FEDERAL COURT DECISIONS.

THE CONTRACTOR AND ITS SUBCONTRACTORS SHALL FURNISH SUCH REPORTS OR OTHER DOCUMENTS TO THE AFFIRMATIVE ACTION OFFICE AS MAY BE REQUESTED BY THE OFFICE FROM TIME TO TIME IN ORDER TO CARRY OUT THE PURPOSES OF THESE REGULATIONS, AND PUBLIC AGENCIES SHALL FURNISH SUCH INFORMATION AS MAY BE REQUESTED BY THE AFFIRMATIVE ACTION OFFICE FOR CONDUCTING A COMPLIANCE INVESTIGATION PURSUANT TO SUBCHAPTER 10 OF THE ADMINISTRATIVE CODE (NJAC17:27).

*** NO FIRM MAY BE ISSUED A PURCHASE ORDER OR CONTRACT WITH THE STATE UNLESS THEY COMPLY WITH THE AFFIRMATIVE ACTION REGULATIONS**

PLEASE CHECK APPROPRIATE BOX (ONE ONLY)

- ● I HAVE A CURRENT NEW JERSEY AFFIRMATIVE ACTION CERTIFICATE, (PLEASE ATTACH A COPY TO YOUR PROPOSAL).
- ○ I HAVE A VALID FEDERAL AFFIRMATIVE ACTION PLAN APPROVAL LETTER, (PLEASE ATTACH A COPY TO YOUR PROPOSAL).
- ○ I HAVE COMPLETED THE ENCLOSED FORM AA302 AFFIRMATIVE ACTION EMPLOYEE INFORMATION REPORT.

REV. 12/90

CITY OF LONG BRANCH
DOCUMENT SUBMISSION CHECKLIST

REQUIRED		READ, SIGNED & SUBMITTED
Yes	PROPOSAL AS REQUIRED IN RFQ	☒
Yes	STOCKHOLDER DISCLOSURE CERTIFICATION	☒
Yes	NON-COLLUSION AFFIDAVIT	☒
Yes	AFFIRMATIVE ACTION QUESTIONAIRE	☒

		REVIEWED
Yes	MANDATORY AFFIRMATIVE ACTION LANGUAGE	☒
Yes	AMERICANS WITH DISABLILITIES ACT OF 1990	☒
Yes	N. J. BUSINESS REGISTRATION LANGUAGE	☒
Yes	LONG BRANCH PAY TO PLAY ORDINANCE	☒

CITY OF LONG BRANCH, MUNICIPAL BUILDING, 344 BROADWAY, LONG BRANCH, N.J. 07740 (732) 571-5645

Howard H. Woolley, Jr
Business Administrator

TO: Council Members

FROM: Howard H. Woolley, Jr.
Business Administrator

RE: Contract for Legal Services Pool

DATE: July 2, 2008

After examining the proposals submitted to the City of Long Branch for Legal Services, it is the recommendation of the Mayor and Business Administrator to award a contract for legal services for the term of July 1, 2008 through June 30, 2009 to:

Greenbaum, Rowe, Smith & Davis, LLP
McKenna, Dupont, Higgins & Stone, PC
DiFrancesco, Bateman, Coley, Yospin, Kunzman, Davis & Lehrer
Mark R. Aikins, LLC
Maxwell Colby, Esquire

Based upon prior history, the City of Long Branch has determined that the above referenced attorneys have the experience, expertise and resources to provide the services required by the City of Long Branch.

HHW:gb

AGREEMENT
THIS AGREEMENT MADE THIS DAY OF

BETWEEN:

CITY OF LONG BRANCH
344 Broadway
Long Branch, NJ 07740

Hereinafter called the CITY

AND

DIFRANCESCO, BATEMAN, COLEY, YOSPIN, KUNZMAN, DAVIS & LEHRER, P.C.
15 Mountain Boulevard
Warren, New Jersey 07059-5686

WITNESSETH:

WHEREAS, the City of Long Branch is desirous of retaining DiFrancesco, Bateman, Coley, Yospin, Kunzman, Davis & Lehrer, P.C. to provide legal services to aid the City; and

NOW, THEREFORE, in consideration for the execution of this Agreement and the supplying of services hereunder, the parties agree as follows:

1. This contract is awarded as an open-ended contract. During the term of the contract, a purchase order will be issued, with a not to exceed value, to authorize work for specific matters. No services are to be provided by the contractor prior to the date of the purchase order; further, the contractor may not provide services, nor bill for services, for costs exceeding the amount of the purchase order. It is the Contractor's responsibility to notify the City prior to providing services if there are insufficient funds left on a specific purchase order, and the insure that an amended or new purchase order has been issued by the City.

Contractor is required to bill for services on a monthly basis, at hourly rates as specified in its proposal. Bills are to be forwarded to the City Finance Office no later that twenty-one calendar days after the end of the calendar month, or the date of the contractor's monthly billing cycle.

2. DiFrancesco, Bateman, Coley, Yospin, Kunzman, Davis & Lehrer, P.C. agrees to provide services.

3. Contractor will submit billing and vouchers on a monthly basis.

4. The term of said contract shall be to June 30, 2009.

5. The City will not honor any of your invoices that exceed the contract amount unless, prior to you or your firm exceeding that amount you notify the City so that an amendment to your contract can be considered by the Mayor and Council, and, if appropriate, approved.

Due to the number of professional service contractors the City deals with, it is important for each contractor to recognize the limit of their contract, and advise the City Administrator and City Attorney of the need to continue service with an amendment to the contract.

The Administrator and Attorney would then make the appropriate recommendation to the City Council based upon the facts and circumstances, as they exist at that time.

However, please understand that this application must be made In advance of providing any services the cost of which would exceed the contract amount, and only after having an amended contract approved by resolution of City Council will you be

authorized to proceed.

6. The Contractor certifies it complies with Affirmative Action regulations. During the performance of this contract, the contractor agrees as follows:

The contractor or subcontractor, where applicable will not discriminate against any employee or applicant for employment because of age, race, creed, color, national origin, ancestry, marital status, affectional or sexual orientation, or sex. Except with respect to affectional or sexual orientation, the contractor will take affirmative action to ensure that such applicants are recruited and employed, and that employees are treated during employment, without regard to their age, race, creed, color, national origin, ancestry, marital status, affectional or sexual orientation or sex. Such action shall include, but not be limited to the following: employment, upgrading, demotion, or transfer; recruitment or recruitment advertising; layoff or termination; rates of pay or other
forms of compensation; and selection for training including apprenticeship. The contractor agrees to post in conspicuous places, available to employees and applicants for employment, notices to be provided by the Public Agency Compliance Officer, setting forth provisions of this non-discrimination clause.

The contractor or subcontractor, where applicable, will, in all solicitations or advertisements for employees placed by or on behalf of the contractor, state that all qualified applicants will receive consideration for employment without regard to their age, race, creed, color, national origin, ancestry, marital status, affectional or sexual orientation or sex.

The contractor or subcontractor, where applicable, agrees to comply with any regulations promulgated by the Treasurer pursuant to NJSA 10:5-36 et. seq. as amended and supplemented from time to time and the Americans with

Disabilities Act.

The contractor or subcontractor agrees to make good faith efforts to employ minority and women workers consistent with the applicable county employment goals established in accordance with NJAC 17:275.2, or a binding determination of the applicable county employment goals determined by the Division, pursuant to NJSA 17:275.2.

The contractor or subcontractor agrees to inform in writing it's appropriate recruitment agencies including, but not limited to, employment agencies, placement bureaus, colleges, universities, labor unions that it does not discriminate on the basis of age, creed, color, national origin, ancestry, marital status, affectional or sexual orientation or sex, and that it will discontinue the use of any recruitment agency which engages in direct or indirect discriminatory practices. The contractor or subcontractor agrees to revise any of its testing procedures, if necessary, to assure that all personnel testing conforms with the principals of job related testing, as established by the statutes and court decisions of the state of New Jersey and as established by applicable federal law and applicable federal court decisions.

In conforming with the applicable employment goals, the contractor or subcontractor agrees to review all procedures relating to transfer, upgrading, down grading and layoff to ensure that all such actions are taken without regard to age, creed, color, national origin, ancestry, marital status, sex, affectional or sexual orientation, and conform with the applicable employment goals, consistent with the statutes and court decisions of the state of New Jersey, and applicable federal law and applicable Federal court decisions.

The contractor and its subcontract shall furnish such reports or other documents to the Division of contract compliance and EEO as maybe requested by the office from time to time in order to carry out the purposes of these regulations, and public agency shall furnish information as may be requested by the Division of Contract Compliance and EEO for conducting a compliance investigation pursuant to subchapter 10 of the administrative code of NJAC17:27.

A contractor. subcontractor or supplier who fails to provide proof of business registration or provides false business registration information shall be liable to a penalty or $25 for each day of violation, not to exceed $50,000 for each business registration not properly provided or maintained under a contract with the contracting agency. Information of the law and its requirements is available by calling (609) 292-9292.

7. The City shall publish notice of said award of this agreement in the legal ad section of its official newspaper, and shall have on file for public inspection a copy of this contract and authorizing resolution as prescribed by law.

8. "The contractor, in executing this contract document, acknowledges that it complies with City Ordinance # 18-05, annexed hereto, and New Jersey ELEC laws, rules and regulations, and has not given any political contribution that would bar it from being awarded this contract."

9. Contractor is advised that the responsibility to file an annual disclosure statement on political contributions with the New Jersey Election Enforcement commission pursuant to N.J.S.A. 19:44A-20.3 (P .L. 205, c, 271, s.3), if the contractor receives contracts in excess of

$50,000 from public Entities in a calendar year. It is the contractor's responsibility to determine if filing is necessary. Additional information on this requirement is available from ELEC at 888-313-3532 or at www.elec.state.ni.us.

10. This Contract shall be binding upon the City has caused this instrument to be signed by ADAM SCHNEIDER, MAYOR attested by IRENE A. JOLINE, CLERK and the Municipal Seal to be hereunto affixed and the CONTRACTOR hereunto set their hand and seals, or caused these presents to be signed by their proper corporate officers and their proper corporate seal to be hereto affixed, the day and year first above mentioned.

ATTEST:

CITY OF LONG BRANCH

_____

Irene A. Joline, City Clerk

_____

Adam Schneider, Mayor

ATTEST:

BY:

_____

_____

DONALD T. DIFRANCESCO
CHRISTOPHER "KIP" BATEMAN
HARRY A. YOSPIN[□]
STEVEN A. KUNZMAN[□]
STEPHEN O. DAVIS[◇]*
JEFFREY B. LEHRER[□]
RICHARD P. FLAUM[△▽]
JOHN P. BELARDO[□♦]
JOHN V. BIVONA[◇◇]
MARTIN ALLEN
JAMES E. HAY[◇]
DAVID P. WADYKA[¤]
ALBERT E. CRUZ[□]
TIMOTHY P. BECK[◇]*
RICHARD J. GUSS
PAUL R. RIZZO*
RICHARD R. AHSLER
V. ANTHONY DIGIROLAMO[□♦]
LISA M. FITTIPALDI[†]
MICHAEL V. CRESITELLO, JR.[◇]

OF COUNSEL
EDWIN D. KUNZMAN
JOHN E. COLEY, JR.[□]
JEFFREY W. POMPEO[■]
JAMES J. MOLOUGHNEY[✓]
SANTINA M. BOMBACI
MICHAEL A. PATICCHIO

DIFRANCESCO, BATEMAN, COLEY, YOSPIN, KUNZMAN, DAVIS & LEHRER, P.C.

ATTORNEYS AT LAW
15 MOUNTAIN BOULEVARD
WARREN, NEW JERSEY 07059-5686
SOMERSET COUNTY

(908) 757-7800
FAX: (908) 757-8039
EMAIL: DBC@NEWJERSEYLAW.NET
WEBSITE: WWW.DBNJLAW.COM

AFFILIATED WITH BIVONA & COHEN, P.C.
NEW YORK, NEW YORK

AFFILIATED OFFICES
LOS ANGELES PHILADELPHIA LONDON BOCA RATON

SANDRA BELLI
RAYMOND J. STINE
WILLIAM J. WILLARD[□]
JOHN J. RUSSO*
JOSEPH V. SORDILLO[□]
MATTHEW C. DORSI[□▲]
JAMES M. HARDING
LAUREN R. STAIGER[□]
JOSHUA H. BEINHAKER
THOMAS BASTA
ALYSSA C. YULIS[□]
VICTORIA D. BRITTON[○]

MEMBERS OF THE NEW JERSEY BAR
[□]also NY [◇]also PA [△]also DC
[†]also TX [¤]also MO [♦]LLM-Taxation
[▽]also MD [○]also CT
[■]Director of Finance and Administration
*Certified by the Supreme Court of NJ as a Civil Trial Attorney
✓Certified by the Supreme Court of NJ as a Matrimonial Law Attorney
[▲]Certified by the Supreme Court of NJ as a Criminal Trial Attorney

Writer's Ext. 170

June 25, 2008

Carol Mellaci, Purchasing Agent
City of Long Branch
Purchasing Office
344 Broadway
Long Branch, NJ 07740

Re: City of Long Branch Tax Appeals
Our File: LB16181

Dear Ms. Mellaci:

Enclosed please find an original and four copies of our completed bid proposal for position of Conflict Attorney to the City of Long Branch.

Please feel free to contact me should you have any questions or require additional information.

Very truly yours,

STEVEN A. KUNZMAN

SAK/ams
enclosures

A0525396.WPD/AMS

CITY OF LONG BRANCH

QUALIFICATIONS SUBMISSION FOR LEGAL SERVICES AS CONFLICT COUNSEL

DiFrancesco, Bateman, Coley, Yospin, Kunzman, Davis & Lehrer, P.C., submit the following qualifications for legal services as Conflict Attorney in matters as assigned by the City Attorney:

1. Name, address, phone and fax number of firm:

The location of its principal office is **15 Mountain Boulevard, in the Township of Warren, in the County of Somerset in the State of New Jersey. Phone number is (908)757-7800 and fax number is (908) 757-8039**. The Federal Tax Identification number is **22-2084495**. **Donald DiFrancesco, Esq.** is the agent in charge of said office upon whom notice may be legally served.

2. Biography or history of the firm.

The Law Firm of **DiFrancesco, Bateman, Coley, Yospin, Kunzman, Davis & Lehrer, P.C.** was founded in 1914. Founded in Plainfield, New Jersey as Kunzman & Kunzman, the law firm moved to Warren, New Jersey. The law firm has grown steadily over the past 90+ years.

3. List of principals and/or partners.

The Law Firm principal stockholders are Donald T. DiFrancesco, Christopher S. Bateman, Harry A. Yospin, Steven A. Kunzman, Stephen O. Davis, Jeffrey B. Lehrer and Richard P. Flaum. The income partners are Martin Allen, James E. Hay, David P. Wadyka, Albert E. Cruz, Timothy P. Beck, Richard J. Guss and Michael Cresitello.

4. List of attorneys that would be assigned to Long Branch matters, including a summary of their educations, qualifications, expertise and experience as it relates to the services the City requires. Indicate the approximate percentage of work each would be assigned. <u>The principals or parties assigned to Long Branch must have a minimum of 10 years experience in New Jersey Municipal law.</u>

Steven A. Kunzman, will be assigned to and be responsible for assessing and handling matters for Long Branch awarded under this contract. Mr. Kunzman has been with the law firm since 1981 and has been licensed to practice law since 1981. Mr. Kunzman received his J.D. and Master of Studies in Environmental Law from Vermont Law School and his B.A. from Colgate University. Mr. Kunzman has represented municipalities in numerous areas during his 27 years of practice, including land use, environmental, COAH, brown fields development, solid waste, hazardous waste, general litigation and general counsel. Associates in the municipal and litigation departments may be assigned to assist Mr. Kunzman and Mr. Allen.

Martin Allen, Esq., an income partner with the law firm, will be assigned to and be responsible for handling **all** Long Branch tax appeal matters awarded under the contract. Mr. Allen has been associated with the Law Firm since January 1989 and was licensed to practice law in the State of New Jersey in the fall of 1983. Mr. Allen is licensed to practice law in New Jersey. He is a member of the New Jersey State and American Bar Associations. Mr. Allen is a 1975 graduate of Metuchen High School. He received his Bachelor of Arts, Majoring in History and Political Science, with honors in history from Washington & Jefferson College, Washington, Pennsylvania, in 1979. He received a Juris Doctorate from Rutgers School of Law, Camden, New Jersey, in 1982. Mr. Allen has over fifteen

years experience defending municipalities in real estate tax assessment appeals. Mr. Allen has twenty-two years of legal experience concentrating in real estate taxation, land use law, real estate law, municipal law, asset recovery litigation, and secured lending matters.

5. List of References from at least 2 municipalities for which the firm has provided similar services, including name, address, phone and contact information.

- Readington Township, Hunterdon County - Municipal Building, 509 Route 523, Whitehouse, New Jersey 08889, phone number (908) 534-4051:Township Clerk/Administrator, Vita Mekovetz; Assessor, Mary Mastro; Tax Collector, Bonnie Holborow.

- Warren Township, Somerset County - Municipal Building, 46 Mountain Boulevard, Warren, New Jersey 07059, (908) 753-8000: Township Administrator, Mark M. Krane; Assessor, Edward L. Kerwin, Jr.

- Watchung Borough, Somerset County - Municipal Building, 15 Mountain Boulevard, Watchung, New Jersey 07069, (908) 756-0080:Mayor Albert Ellis; Administrator/Clerk, Loreen Fellin; Assessor, David Gill.

- Manville Borough, Somerset County - Municipal Building, 325 North Main Street, Manville, New Jersey 08835, (908) 725-9478: Administrator, Gary P. Garwacke.

6. Provide prior experience, if any, the firm may have providing services to the City of Long Branch, and in what capacity.

The Firm and Mr. Allen have served as Conflict Attorney relative to tax appeals since the fall of 2004.

7. List of Municipalities currently under contract with the firm.

The Firm represents numerous municipalities as municipal attorney, special counsel, board counsel and conflict counsel, including: Bridgewater Township, Somerset County; Clinton Township, Hunterdon County; Edison Township, Middlesex County; Flemington Borough, Hunterdon County; Hillsborough Township, Somerset County; Independence Township, Warren County; Lebanon Township, Hunterdon County; Manville Borough, Somerset County; Montgomery Township, Somerset County; Raritan Borough, Somerset County; Raritan Township, Hunterdon County; Watchung Borough, Somerset County, Warren Township, Somerset County; Woodbridge Township, Middlesex County; and Stafford Township, Ocean County.

8. Provide a fee schedule by title for all firm members and employees. Indicate which fees would apply for attorneys and employees assigned to Long Branch matters.

The Law Firm will **bill all Long Branch matters** for **all attorneys** at the **rate of $140 per hour**, minimum billing of one tenth of an hour. This is a substantial discount from our private client rates which are as follows:

Senior partner	$350/hour
Junior partner	$300/hour
Senior associate	$250/hour
Junior associate	$200/hour

A0525252.WPD/AMS

Paralegal services will be billed at the rate of $95/hour.

9. Provide a schedule of any and all other fees routinely charged by the firm during the course of providing services as Conflict Counsel.

All costs and expenses will be billed to the City, including, but not limited to: travel to and from Court, the County Tax Board, the City offices and any property inspections; copy or other duplicating costs; deposition services; expert services. Additional expenses may include messenger services, overnight priority mail fees or any other extra-ordinary.

10. Copy of Current Certificate of Insurance.

Enclosed.

FIRM: **DiFRANCESCO, BATEMAN, COLEY, YOSPIN, KUNZMAN, DAVIS & LEHRER, P.C.**

By:_____
Steven A. Kunzman, Esq.

DATE: June 24, 2008

TELEPHONE #: 908-757-7800 FAX #: 908-757-8039

A0525252.WPD/AMS

Client#: 36672 DIFRABATEM

ACORD™ CERTIFICATE OF LIABILITY INSURANCE

DATE (MM/DD/YYYY) 02/06/08

PRODUCER
Commerce Insurance Services
1701 Route 70 East
P.O. Box 2060
Cherry Hill, NJ 08034

THIS CERTIFICATE IS ISSUED AS A MATTER OF INFORMATION ONLY AND CONFERS NO RIGHTS UPON THE CERTIFICATE HOLDER. THIS CERTIFICATE DOES NOT AMEND, EXTEND OR ALTER THE COVERAGE AFFORDED BY THE POLICIES BELOW.

INSURED
DiFrancesco, Bateman, Coley, Yospin,
15 Mountain Boulevard
Warren, NJ 07059

INSURERS AFFORDING COVERAGE	NAIC #
INSURER A: St. Paul Fire & Marine Insurance Co	24767
INSURER B:	
INSURER C:	
INSURER D:	
INSURER E:	

COVERAGES

THE POLICIES OF INSURANCE LISTED BELOW HAVE BEEN ISSUED TO THE INSURED NAMED ABOVE FOR THE POLICY PERIOD INDICATED. NOTWITHSTANDING ANY REQUIREMENT, TERM OR CONDITION OF ANY CONTRACT OR OTHER DOCUMENT WITH RESPECT TO WHICH THIS CERTIFICATE MAY BE ISSUED OR MAY PERTAIN, THE INSURANCE AFFORDED BY THE POLICIES DESCRIBED HEREIN IS SUBJECT TO ALL THE TERMS, EXCLUSIONS AND CONDITIONS OF SUCH POLICIES. AGGREGATE LIMITS SHOWN MAY HAVE BEEN REDUCED BY PAID CLAIMS.

INSR LTR	ADD'L INSRD	TYPE OF INSURANCE	POLICY NUMBER	POLICY EFFECTIVE DATE (MM/DD/YY)	POLICY EXPIRATION DATE (MM/DD/YY)	LIMITS	
		GENERAL LIABILITY				EACH OCCURRENCE	$
		COMMERCIAL GENERAL LIABILITY				DAMAGE TO RENTED PREMISES (Ea occurrence)	$
		CLAIMS MADE / OCCUR				MED EXP (Any one person)	$
						PERSONAL & ADV INJURY	$
						GENERAL AGGREGATE	$
		GEN'L AGGREGATE LIMIT APPLIES PER:				PRODUCTS - COMP/OP AGG	$
		POLICY / PRO-JECT / LOC					
		AUTOMOBILE LIABILITY				COMBINED SINGLE LIMIT (Ea accident)	$
		ANY AUTO					
		ALL OWNED AUTOS				BODILY INJURY (Per person)	$
		SCHEDULED AUTOS					
		HIRED AUTOS				BODILY INJURY (Per accident)	$
		NON-OWNED AUTOS					
						PROPERTY DAMAGE (Per accident)	$
		GARAGE LIABILITY				AUTO ONLY - EA ACCIDENT	$
		ANY AUTO				OTHER THAN AUTO ONLY: EA ACC	$
						AGG	$
		EXCESS/UMBRELLA LIABILITY				EACH OCCURRENCE	$
		OCCUR / CLAIMS MADE				AGGREGATE	$
							$
		DEDUCTIBLE					$
		RETENTION $					$
		WORKERS COMPENSATION AND EMPLOYERS' LIABILITY				WC STATU-TORY LIMITS / OTH-ER	
		ANY PROPRIETOR/PARTNER/EXECUTIVE OFFICER/MEMBER EXCLUDED?				E.L. EACH ACCIDENT	$
		If yes, describe under SPECIAL PROVISIONS below				E.L. DISEASE - EA EMPLOYEE	$
						E.L. DISEASE - POLICY LIMIT	$
A		OTHER Lawyers Professional	GL09002120	10/09/07	10/09/08	$5,000,000 Limit $5,000,000 Aggregate	

DESCRIPTION OF OPERATIONS / LOCATIONS / VEHICLES / EXCLUSIONS ADDED BY ENDORSEMENT / SPECIAL PROVISIONS

CERTIFICATE HOLDER

CANCELLATION

SHOULD ANY OF THE ABOVE DESCRIBED POLICIES BE CANCELLED BEFORE THE EXPIRATION DATE THEREOF, THE ISSUING INSURER WILL ENDEAVOR TO MAIL 30 DAYS WRITTEN NOTICE TO THE CERTIFICATE HOLDER NAMED TO THE LEFT, BUT FAILURE TO DO SO SHALL IMPOSE NO OBLIGATION OR LIABILITY OF ANY KIND UPON THE INSURER, ITS AGENTS OR REPRESENTATIVES.

AUTHORIZED REPRESENTATIVE
John P Morrissey

© ACORD CORPORATION 1988

CITY OF LONG BRANCH

NON-COLLUSION AFFIDAVIT

STATE OF NEW JERSEY :

:SS.

COUNTY OF SOMERSET :

I, **Steven A. Kunzman,** of the Township of Warren, in the County of Somerset and the State of New Jersey, of full age, being duly sworn according to law on my oath depose and say that:

I am a licensed attorney at law in the State of New Jersey and a Partner with the firm of **DiFrancesco, Bateman, Coley, Yospin, Kunzman, Davis & Lehrer, P.C.** the professional entity making the submission for the bid proposal entitled **Conflict Attorney for the City of Long Branch,** and that I have executed the said proposal with full authority to do so; the firm of **DiFrancesco, Bateman, Coley, Yospin, Kunzman, Davis & Lehrer, P.C.** has not, directly or indirectly, entered into any agreements, participated in any collusion or otherwise taken any action in restraint of fair and open competition in connection with the above-named project; and that all statements contained in said proposal and this affidavit are true and correct, and made with full knowledge that the **City of Long Branch** relies upon the truth of the statements contained in said proposal and in the statements contained in this affidavit in awarding the contract for the said project.

I further warrant that no person or selling agency has been employed or retained to solicit or secure such contract upon an agreement or understanding for a commission, percentage, brokerage or contingent fee, except bonafide employees or bonafide established, commercial or selling agencies maintained by **DiFrancesco, Bateman, Coley, Yospin, Kunzman, Davis & Lehrer, P.C.**

Subscribed and sworn to before me

this 24 day of June, 2008

Marilyn Amsterdam
Notary Public, State of New Jersey

Steven A. Kunzman, Esq., Partner

MARILYN AMSTERDAM
A Notary Public of New Jersey
My Commission Expires August 27, 2011

A0525252.WPD/AMS

CITY OF LONG BRANCH

STOCKHOLDER DISCLOSURE CERTIFICATION

If bidder is a sole proprietorship, check here ____
And do not complete this statement.

The UNDERSIGNED, as bidder, in accordance with P.L. 1977, Chapter 33, of the State of New Jersey, declares and submits this Statement of Ownership.

Bidder is a Corporation (X) Partnership ( )

Name of Business: DiFrancesco, Bateman, *Coley, Yospin, Kunzman, Davis & Lehrer, PC*

I certify that the list below contains t*he names an*d home addresses of all stockholders holding 10% or more of the issued and outstanding stock of the undersigned.

The type of business organization is a professional corporation.

Sign and notiarize the form below, and, if necessary, complete the stockholder list below:

I. Stockholders:

Name of Stockholder	Home Address
Donald T. DiFrancesco	6 Forest Drive, Warren, NJ 07059
Christopher Bateman	309 Bebe Court, Neshanic Station, NJ 08853
Harry A. Yospin	20 Broadway Road, Warren, NJ 07059
Steven A. Kunzman	64 Big Spring Road, Califon, NJ 07830
Stephen O. Davis	223 Carol Jean Way, Branchburg, NJ 08876
Jeffrey B. Lehrer	980 Raritan Road, Scotch Plains, NJ 07078
Richard P. Flaum	6 Chaucer Road, Short Hills, NJ 07078

(If a corporation or partnership is shown as an owner of 10% or more stock, you must attach a Stockholder Disclosure form for the corporation/partnership.)

THIS FORM MUST BE INCLUDED WITH BID SUBMISSION.

Subscribed and sworn before me this 24 day
of June, 2008

(signature of officer/owner)

Marilyn Amsterdam
(Notary public)

Steven A. Kunzman, Partner
(name and title)

MARILYN AMSTERDAM
A Notary Public of New Jersey
My Commission Expires August 27, 2011

A0525252.WPD/AMS

REQUIRED EVIDENCE
AFFIRMATIVE ACTION REGULATION
P.L. 1975, C. 127 (N.J.A.C. 17:27)

If awarded a contract, all procurement and service contractors will be required to comply with the requirements of P.L. 1975, C. 127 (N.J.A.C. 17:27). Within seven (7) days after receipt of the notification of intent to award the contract or receipt of the contract, whichever is sooner, the contractor should present one of the following to the Purchasing Agent.

1. A photocopy of a valid letter from the U.S. Department of Labor that the contractor has an existing federally-approved or sanctioned Affirmative Action Plan (good for one year from the date of the letter).

OR

2. A photocopy of approved Certificate of Employee Information report from the State of New Jersey.

OR

3. An Affirmative Action Employee Information Report (Form AA302).

OR

4. All successful construction contractors must submit, within three (3) days of the signing of the contract, an Initial Project Manning Report (AA201) for any contract award that meets or exceeds the Public Agency bidding threshold (available upon request).

NO FIRM MAY BE ISSUED A CONTRACT UNLESS IT COMPLIES WITH THE AFFIRMATIVE ACTION REGULATIONS OF P.L. 1875, C. 127.

The following questions must be answered by all bidders:

1. Do you have a federally-approved or sanctioned Affirmative Action Program?

___ Yes __√ No If yes, please submit copy of such approval.

2. Do you have a Certificate of Employee Information Report Approval?

__√ Yes ___ No If yes, please submit copy of such certificate.

The undersigned contractor certifies that he is aware of the commitment to comply with the requirements of P.L. 1975, C. 127, and agrees to furnish the required documentation pursuant to law.

COMPANY: DiFrancesco, Bateman, Coley, Yospin, Kunzman, Davis & Lehrer, PC

SIGNATURE: _____

TITLE: Partner

NOTE: A CONTRACTOR'S BID MUST BE REJECTED AS NON-RESPONSIVE IF A CONTRACTOR FAILS TO COMPLY WITH REQUIREMENTS OF P.L. 1975, C. 127 WITHIN THE REQUIRED TIME FRAME.

A0525252.WPD/AMS

Certification 5312

CERTIFICATE OF EMPLOYEE INFORMATION REPORT

RENEWAL

This is to certify that the contractor listed below has submitted an Employee Information Report pursuant to N.J.A.C. 17:27-1.1 et. seq. and the State Treasurer has approved said report. This approval will remain in effect for the period of **15-AUG-2007** to **15-AUG-2010**

DIFRANCESO, BATEMAN, COLEY, YOSPIN, KUNZMAN, DAVIS
15 MOUNTAIN BOULEVARD
WARREN NJ 07059 6327

Bradley Abelow
State Treasurer

CITY OF LONG BRANCH, MUNICIPAL BUILDING, 344 BROADWAY, LONG BRANCH, N.J. 07740 (732) 571-5645

Howard H. Woolley, Jr
Business Administrator

TO: Council Members

FROM: Howard H. Woolley, Jr.
Business Administrator

RE: Contract for Legal Services Pool

DATE: July 2, 2008

After examining the proposals submitted to the City of Long Branch for Legal Services, it is the recommendation of the Mayor and Business Administrator to award a contract for legal services for the term of July 1, 2008 through June 30, 2009 to:

Greenbaum, Rowe, Smith & Davis, LLP
McKenna, Dupont, Higgins & Stone, PC
DiFrancesco, Bateman, Coley, Yospin, Kunzman, Davis & Lehrer
Mark R. Aikins, LLC
Maxwell Colby, Esquire

Based upon prior history, the City of Long Branch has determined that the above referenced attorneys have the experience, expertise and resources to provide the services required by the City of Long Branch.

HHW:gb

AGREEMENT
THIS AGREEMENT MADE THIS DAY OF

BETWEEN:

CITY OF LONG BRANCH
344 Broadway
Long Branch, NJ 07740

Hereinafter called the CITY

AND

MARK R. AIKINS, L.L.C.
3350 Route 138, Building 1, Suite 113
Wall, NJ 07719

WITNESSETH:

WHEREAS, the City of Long Branch is desirous of retaining Mark R. Aikins, L.L.C. to provide legal services to aid the City; and

NOW, THEREFORE, in consideration for the execution of this Agreement and the supplying of services hereunder, the parties agree as follows:

1. This contract is awarded as an open-ended contract. During the term of the contract, a purchase order will be issued, with a not to exceed value, to authorize work for specific matters. No services are to be provided by the contractor prior to the date of the purchase order; further, the contractor may not provide services, nor bill for services, for costs exceeding the amount of the purchase order. It is the Contractor's responsibility to notify the City prior to providing services if there are insufficient funds left on a specific purchase order, and the insure that an amended or new purchase order has been issued by the City.

Contractor is required to bill for services on a monthly basis, at hourly rates as specified in its proposal. Bills are to be forwarded to the City Finance Office no later that twenty-one calendar days after the end of the calendar month, or the date of the contractor's monthly billing cycle.

2. Mark R. Aikins, L.L.C. agrees to provide services.

3. Contractor will submit billing and vouchers on a monthly basis.

4. The term of said contract shall be to June 30, 2009.

5. The City will not honor any of your invoices that exceed the contract amount unless, prior to you or your firm exceeding that amount you notify the City so that an amendment to your contract can be considered by the Mayor and Council, and, if appropriate, approved.

Due to the number of professional service contractors the City deals with, it is important for each contractor to recognize the limit of their contract, and advise the City Administrator and City Attorney of the need to continue service with an amendment to the contract.

The Administrator and Attorney would then make the appropriate recommendation to the City Council based upon the facts and circumstances, as they exist at that time.

However, please understand that this application must be made In advance of providing any services the cost of which would exceed the contract amount, and only after having an amended contract approved by resolution of City Council will you be

authorized to proceed.

6. The Contractor certifies it complies with Affirmative Action regulations. During the performance of this contract, the contractor agrees as follows:

The contractor or subcontractor, where applicable will not discriminate against any employee or applicant for employment because of age, race, creed, color, national origin, ancestry, marital status, affectional or sexual orientation, or sex. Except with respect to affectional or sexual orientation, the contractor will take affirmative action to ensure that such applicants are recruited and employed, and that employees are treated during employment, without regard to their age, race, creed, color, national origin, ancestry, marital status, affectional or sexual orientation or sex. Such action shall include, but not be limited to the following: employment, upgrading, demotion, or transfer; recruitment or recruitment advertising; layoff or termination; rates of pay or other
forms of compensation; and selection for training including apprenticeship. The contractor agrees to post in conspicuous places, available to employees and applicants for employment, notices to be provided by the Public Agency Compliance Officer, setting forth provisions of this non-discrimination clause.

The contractor or subcontractor, where applicable, will, in all solicitations or advertisements for employees placed by or on behalf of the contractor, state that all qualified applicants will receive consideration for employment without regard to their age, race, creed, color, national origin, ancestry, marital status, affectional or sexual orientation or sex.

The contractor or subcontractor, where applicable, agrees to comply with any regulations promulgated by the Treasurer pursuant to NJSA 10:5-36 et. seq. as amended and supplemented from time to time and the Americans with

Disabilities Act.

The contractor or subcontractor agrees to make good faith efforts to employ minority and women workers consistent with the applicable county employment goals established in accordance with NJAC 17:275.2, or a binding determination of the applicable county employment goals determined by the Division, pursuant to NJSA 17:275.2.

The contractor or subcontractor agrees to inform in writing it's appropriate recruitment agencies including, but not limited to, employment agencies, placement bureaus, colleges, universities, labor unions that it does not discriminate on the basis of age, creed, color, national origin, ancestry, marital status, affectional or sexual orientation or sex, and that it will discontinue the use of any recruitment agency which engages in direct or indirect discriminatory practices. The contractor or subcontractor agrees to revise any of its testing procedures, if necessary, to assure that all personnel testing conforms with the principals of job related testing, as established by the statutes and court decisions of the state of New Jersey and as established by applicable federal law and applicable federal court decisions.

In conforming with the applicable employment goals, the contractor or subcontractor agrees to review all procedures relating to transfer, upgrading, down grading and layoff to ensure that all such actions are taken without regard to age, creed, color, national origin, ancestry, marital status, sex, affectional or sexual orientation, and conform with the applicable employment goals, consistent with the statutes and court decisions of the state of New Jersey, and applicable federal law and applicable Federal court decisions.

The contractor and its subcontract shall furnish such reports or other documents to the Division of contract compliance and EEO as maybe requested by the office from time to time in order to carry out the purposes of these regulations, and public agency shall furnish information as may be requested by the Division of Contract Compliance and EEO for conducting a compliance investigation pursuant to subchapter 10 of the administrative code of NJAC17:27.

A contractor. subcontractor or supplier who fails to provide proof of business registration or provides false business registration information shall be liable to a penalty or $25 for each day of violation, not to exceed $50,000 for each business registration not properly provided or maintained under a contract with the contracting agency. Information of the law and its requirements is available by calling (609) 292-9292.

7. The City shall publish notice of said award of this agreement in the legal ad section of its official newspaper, and shall have on file for public inspection a copy of this contract and authorizing resolution as prescribed by law.

8. "The contractor, in executing this contract document, acknowledges that it complies with City Ordinance # 18-05, annexed hereto, and New Jersey ELEC laws, rules and regulations, and has not given any political contribution that would bar it from being awarded this contract."

9. Contractor is advised that the responsibility to file an annual disclosure statement on political contributions with the New Jersey Election Enforcement commission pursuant to N.J.S.A. 19:44A-20.3 (P .L. 205, c, 271, s.3), if the contractor receives contracts in excess of

$50,000 from public Entities in a calendar year. It is the contractor's responsibility to determine if filing is necessary. Additional information on this requirement is available from ELEC at 888-313-3532 or at www.elec.state.ni.us.

10. This Contract shall be binding upon the City has caused this instrument to be signed by ADAM SCHNEIDER, MAYOR attested by IRENE A. JOLINE, CLERK and the Municipal Seal to be hereunto affixed and the CONTRACTOR hereunto set their hand and seals, or caused these presents to be signed by their proper corporate officers and their proper corporate seal to be hereto affixed, the day and year first above mentioned.

ATTEST:

CITY OF LONG BRANCH

_____

Irene A. Joline, City Clerk

_____

Adam Schneider, Mayor

ATTEST:

BY:

_____

_____

MARK R. AIKINS, L.L.C.

RFQ SUBMISSION

FOR LEGAL SERVICES POOL

CITY OF LONG BRANCH

MARK R. AIKINS, L.L.C.

COUNSELORS AT LAW
AUTUMN RIDGE OFFICE PARK
3350 ROUTE 138, BUILDING 1, SUITE 113
WALL, NEW JERSEY 07719

MARK R. AIKINS
E-MAIL: maikins@aikinslaw.com

COLLEEN M. PANZINI
E-MAIL: cpanzini@aikinslaw.com

TELEPHONE: 732-280-2606

FAX: 732-280-8084

June 27, 2008

HAND DELIVERED

Carol Thompson-Mellaci
Purchasing Agent
City of Long Branch
344 Broadway
Long Branch, New Jersey 07740

Re: Request for Qualifications for Professional Service Contract
Legal Services Pool

Dear Ms. Mellaci:

Please be advised that I am providing to you and on behalf of Mark R. Aikins, L.L.C. a response to the Request for Qualifications for Legal Services Pool.

1. The name of the firm is Mark R. Aikins, L.L.C. with principal offices located at:

   Autumn Ridge Office Park
   3350 Route 138
   Building 1, Suite 113
   Wall, New Jersey 07719
   Phone: (732) 280-2606
   Facsimile: (732) 280-8084

2. **History of the Firm**

   The Firm was formed early in 2005, following the dissolution of Carton, Arvanitis, McGreevy, Argeris, Zager & Aikins, L.L.C., where Mark R. Aikins was a 15 year partner and member of the firm's Management Committee. The Firm includes a full time associate attorney, (with over 15 years of experience), a full time office administrator, a full time real estate paralegal and a full time legal secretary. The three (3) support staff have a combined professional experience of more than 75 years. The Firm, in its municipal practice, handles municipal tax and finance matters, public service project contracts, municipal real estate issues, municipal governance matters, licensing for mercantile and alcoholic beverage matters, preparation of municipal ordinances and resolutions, matters relating to redevelopment, defense of pre-rogative writ lawsuits against municipalities and other general counsel needed by municipalities, their elected and appointed officials.

3. **List of principals and/or partners**

Mark R. Aikins is the only principal of the firm.

4. **List of Attorneys**

Mark R. Aikins would be principally assigned to supervise and coordinate all of the work for the City of Long Branch with regard to any conflicts including the City's Redevelopment Counsel. As you can see from the attached resume, the relevant educational background and experience is listed. In addition, kindly note that I was born and raised in Long Branch and educated in the local public school system from kindergarten through Junior High School. I have a knowledge of the history of the City of Long Branch as my grandparents resided in the City from the 1920's through their passing. As the resume indicates, I have served as the Redevelopment Conflict Attorney for the City of Long Branch since 2003, have knowledge of all of the areas of legal expertise that are necessary to represent the City of Long Branch, and have served several other municipalities in the capacity as Redevelopment Counsel during my twenty four (24) year legal career.

In addition, I am assisted by Colleen M. Panzini, Esquire, an Associate in the Firm who has familiarity with municipal matters and has acted as a substitute for me at council meetings, court appearances and related legal duties as needed.

5. **References:**

(a) Howard Woolley
Long Branch City Administrator
City of Long Branch
344 Broadway
Long Branch, New Jersey 07740

(b) Joel Popkin
Neptune City Administrator
Borough of Neptune City
106 West Sylvania Avenue
Neptune City, New Jersey 07753

(c) W. David Richardson
Manalapan Health Officer
Manalapan Board of Health
120 Rt. 522 & Taylors Mills Road
Manalapan, New Jersey 07726

6. **Prior Experience**

I have served as the Borough of Neptune City's general counsel since 1996 and have handled all legal matters for the Borough with the exception of labor law matters since that time.

7. **Municipalities under contract:**

Please see attached list.

8. **Fee Schedule**

All legal services provided to the City of Long Branch in whatever field is deemed to be under the contract would be at a rate of $110.00 per hour, in multiples of tenths of an hour.

9. **Additional Fees**

There are no additional fees to the municipality. On occasion, there are copy fees which need to be paid in litigation matters and there is the return of expert and court filing fees advanced by the firm.

10. **Certificate of Insurance**

A Copy of our Firm's Certificate of Insurance is annexed hereto.

Very truly yours,

Mark R. Aikins

MRA:mb
Enclosures

MARK R. AIKINS
14 North Ward Avenue
Rumson, New Jersey 07760
(732) 741-2773

EMPLOYMENT:

Mark R. Aikins, L.L.C.
Wall, New Jersey
Managing Member, 2005 to Present

Carton, Arvanitis, McGreevy, Argeris, Zager & Aikins, L.L.C.
Tinton Falls, New Jersey
Partner, February 1990 to Firm's Dissolution, December 2004.
(Member, Management Committee)
Associate, September 1985 to January 1990

Honorable Patrick J. McGann, Jr., Freehold, New Jersey
Chancery Division of Superior Court, General Equity
Law Secretary, 1984-1985

LEGAL APPOINTMENTS:

Monmouth County Planning Board, Freehold, New Jersey
Board Attorney, February 2003 to present

Borough of Neptune City, Neptune City, New Jersey
Borough Attorney, January, 1996 to present

City of Long Branch, Long Branch, New Jersey
Conflict Attorney, 2003 to present

City of Long Branch, Long Branch, New Jersey
Redevelopment Counsel, 2003 to present

Borough of Dunellen, Dunellen, New Jersey
Redevelopment Counsel, 2005 to present

Holmdel Board of Health, Holmdel, New Jersey
Board Attorney, July, 1994 to present(excepting 2004)

Manalapan Board of Health, Manalapan, New Jersey
Board Attorney, January, 1991 to present

West Long Branch Senior Citizens Housing Corporation
West Long Branch, New Jersey
Corporation Attorney, January, 1992 to present

Neptune City Housing Authority, Neptune City, New Jersey
Authority Attorney, January, 1996 to present

LEGAL EDUCATION:

Seton Hall University School of Law
Doctor of Jurisprudence, May 1984
Associate Editor, Seton Hall Legislative Journal, 1983-1984

UNDERGRADUATE EDUCATION:

Brown University, Providence, Rhode Island
Bachelor of Arts in Political Science, June 1981
Bachelor of Arts in History, June 1981

AFFILIATIONS:

Central Jersey Bank, N.A.
Director, December, 1997 (of predecessor Monmouth Community Bank)to present

Rumson Country Day School Board of Trustees
Vice President, July 2006 to present
Secretary, July 2003 to June 2006
Trustee, June 2000 to June 2003

Monmouth Museum
Chairman, September 2001 to 2004
Trustee, January 1996 to 2000

Monmouth-Ocean Development Council
President, June 1996 to May, 1998

New Jersey State and Monmouth Bar Associations

REFERENCES:

Available upon request

COLLEEN PANZINI
306 Worthington Avenue
Spring Lake, New Jersey
(732) 449-2843

EMPLOYMENT:

Mark R. Aikins, L.L.C.
Wall, New Jersey
September 2007 to present
Associate Attorney: Co-ordinate active municipal, land use and business practice, including litigation matters.

Law Office of Robert Auerbach
Morganville, New Jersey
1993 to 2000
Trial Attorney: House Counsel for Prudential Insurance Company; case management of approximately 170 insurance defense from pleadings up to and including jury trials.

Law Offices of Lewis & Wood
Trenton, New Jersey
1991 to 1993
Litigation Attorney: Municipal, State and Federal Court litigation; plaintiff and defense civil litigation.

Honorable Alvin Yale Milberg
Freehold, New Jersey
1989 to 1990
Judicial Clerkship: Significant legal research involving prerogative writs, drafting of legal memos and opinions and review of motions, etc.

LEGAL EDUCATION:

Seton Hall University School of Law
Doctor of Jurisprudence, 1989

UNDERGRADUATE EDUCATION:

Brown University, Providence, Rhode Island
Bachelor of Arts, 1986

AFFILIATIONS:

New Jersey State and Monmouth Bar Associations

Borough of Spring Lake Planning & Zoning Board
Spring Lake, New Jersey
Board Chairwoman, January 2006 to present

Borough of Spring Lake Summer Swim Team: Head Coach

MARK R. AIKINS, ESQUIRE

GOVERNMENTAL APPOINTMENTS

Entity	Years	Appointment
Monmouth County Planning Board	2003 - present	Counsel
Borough of Neptune City	1996 - present	Counsel
Borough of Neptune City	2005 - present	Redevelopment Counsel
Neptune City Housing Authority	1996 - present	Counsel
Manalapan Board of Health	1991 - present	Counsel
Holmdel Board of Health	1994 - present (exclu.2004)	Counsel
City of Long Branch	2003 - present	Redevelopment Conflict Counsel
City of Long Branch	2003 - present	General Conflict Counsel
West Long Branch Senior Citizens Housing Corp.	1992 - present	Counsel
Borough of Dunellen	2005 - present	Redevelopment Counsel
Eatontown Sewerage Authority	1998 - 2001	Counsel
Borough of Red Bank Rent Leveling Board	1987 - 1990	Counsel

EXHIBIT A
MANDATORY EQUAL EMPLOYMENT OPPORTUNITY LANGUAGE
N.J.S.A. 10:5-31 et seq. (P.L. 1975, C. 127)
N.J.A.C. 17:27
GOODS, PROFESSIONAL SERVICE AND GENERAL SERVICE CONTRACTS

During the performance of this contract, the contractor agrees as follows:

The contractor or subcontractor, where applicable, will not discriminate against any employee or applicant for employment because of age, race, creed, color, national origin, ancestry, marital status, affectional or sexual orientation, gender identity or expression, disability nationality or sex. Except with respect to affectional or sexual orientation and gender identity or expression, the contractor will take affirmative action to ensure that such applicants are recruited and employed, and that employees are treated during employment, without regard to their age, race, creed, color, national origin, ancestry, marital status, affectional or sexual orientation, gender identity or expression, disability, nationality or sex. Such action shall include, but not be limited to the following: employment, upgrading, demotion, or transfer; recruitment or recruitment advertising; layoff or termination; rates of pay or other forms of compensation; and selection for training, including apprenticeship. The contractor agrees to post in conspicuous places, available to employees and applicants for employment, notices to be provided by the Public Agency Compliance Officer setting forth provisions of this nondiscrimination clause.

The contractor or subcontractor, where applicable will, in all solicitations or advertisements for employees placed by or on behalf of the contractor, state that all qualified applicants will receive consideration for employment without regard to age, race, creed, color, national origin, ancestry, marital status, affectional or sexual orientation, gender identity or expression, disability, nationality or sex.

The contractor or subcontractor, where applicable, will send to each labor union or representative or workers with which it has a collective bargaining agreement or other contract or understanding, a notice, to be provided by the agency contracting officer advising the labor union or workers' representative of the contractor's commitments under this act and shall post copies of the notice in conspicuous places available to employees and applicants for employment.

The contractor or subcontractor, where applicable, agrees to comply with any regulations promulgated by the Treasurer pursuant to N.J.S.A. 10:5-31 et seq., as amended and supplemented from time to time and the Americans with Disabilities Act.

The contractor or subcontractor agrees to make good faith efforts to employ minority and women workers consistent with the applicable county employment goals established in accordance with N.J.A.C. 17:27-5.2, or a binding determination of the applicable county employment goals determined by the Division, pursuant to N.J.A.C. 17:27-5.2.

The contractor or subcontractor agrees to inform in writing its appropriate recruitment agencies including, but not limited to, employment agencies, placement bureaus, colleges, universities, labor unions, that it does not discriminate on the basis of age, creed, color, national origin, ancestry, marital status, affectional or sexual orientation, gender identity or expression, disability, nationality or sex, and that it will discontinue the use of any recruitment agency which engages in direct or indirect discriminatory practices.

The contractor or subcontractor agrees to revise any of its testing procedures, if necessary, to assure that all personnel testing conforms with the principles of job-related testing, as established by the statutes and court decisions of the State of New Jersey and as established by applicable Federal law and applicable federal court decisions.

In conforming with the applicable employment goals, the contractor or subcontractor agrees to review all procedures relating to transfer, upgrading, downgrading and layoff to ensure that all such actions are taken without regard to age, creed, color, national origin, ancestry, marital status, affectional or sexual orientation, gender identity or expression, disability, nationality or sex, consistent with the statutes and court decisions of the State of New Jersey, and applicable Federal law and applicable Federal court decisions.

The contractor shall submit to the public agency, after notification of award but prior to execution of a goods and services contract, one of the following three documents:

Letter of Federal Affirmative Action Plan Approval
Certificate of Employee Information Report
Employee Information Report Form AA302

The contractor and its subcontractors shall furnish such reports or other documents to the Div. of Contract Compliances & EEO as may be requested by the office from time to time in order to carry out the purposes of these regulations, and public agencies shall furnish such information as may be requested by the Div. of Contract Compliance & EEO for conducting a compliance investigation pursuant to **Subchapter 10 of the Administrative Code at N.J.A.C. 17:27.**

AMERICANS WITH DISABILITIES ACT OF 1990

Equal Opportunity for Individuals with Disability

The CONTRACTOR and the OWNER do hereby agree that the provisions of Title II of the American With Disabilities Act of 1990 (the "ACT") (42 U.S.C. S12101 et seq.), which prohibits discrimination on the basis of disability by public entities in all services, programs, and activities provided or made available by public entities, and the rules and regulations promulgated pursuant thereunto, are made a part of this contract. In providing any aid, benefit, or service on behalf of the OWNER pursuant to this contract, the CONTRACTOR agrees that the performance shall be in strict compliance with the Act. In the event that the Contractor, its agents, servants, employees, or subcontractors violate or are alleged to have violated the Act during the performance of this contract, the CONTRACTOR shall defend the OWNER in any action or administrative proceeding commenced pursuant to this Act. The Contractor shall indemnify, protect, and save harmless the OWNER, its agents, servants, and employees from and against any and all suits, claims, losses, demands, or damages, of whatever kind or nature arising out of or claimed to arise out of the alleged violation. The CONTRACTOR shall, at its own expense, appear, defend, and pay any and all charges for legal services and any and all costs and other expenses arising from such action or administrative proceeding or incurred in connection therewith. In any and all complaints brought pursuant to the OWNER grievance procedure, the CONTRACTOR agrees to abide by any decision of the OWNER which is rendered pursuant to said grievance procedure. If any action or administrative proceeding results in an award of damages against the OWNER or if the
OWNER incurs any expense to cure a violation of the ADA which has been brought pursuant to its grievance procedure, the CONTRACTOR shall satisfy and discharge the same at its own expense.

The OWNER shall, as soon as practicable after a claim has been made against it, give written notice thereof to the CONTRACTOR along with full and complete particulars of the claim. If any action or administrative proceedings is brought against the OWNER or any of its agents, servants, and employees, the OWNER shall expeditiously forward or have forwarded to the CONTRACTOR every demand, complaint, notice, summons, pleading, or other process received by the OWNER or its representatives.

It is expressly agreed and understood that any approval by the OWNER of the services provided by the CONTRACTOR pursuant to this contract will not relieve the CONTRACTOR of the obligation to comply with the Act and to defend, indemnify, protect, and save harmless the OWNER pursuant to this paragraph.

It is further agreed and understood that the OWNER assumes no obligation to indemnify or save harmless the CONTRACTOR, its agents, servants, employees and subcontractors for any claim which may arise out of their performance of this Agreement. Furthermore, the CONTRACTOR expressly understands and agrees that the provisions of this indemnification clause shall in no way limit the CONTRACTOR'S obligations assumed in this Agreement, nor shall they be construed to relieve the CONTRACTOR from any liability, nor preclude the OWNER from taking any other actions available to it under any other provisions of the Agreement or otherwise at law.

CONTRACT LANGUAGE FOR
BUSINESS REGISTRATION CERTIFICATE COMPLAINCE

For Procurement (Goods and Services) Contracts
(including Purchase Orders)

N.J.S.A. 52:32-44 imposes the following requirements on contractors and all subcontractors that **knowingly** provide goods or perform services for a contractor fulfilling this contract: 1) the contractor shall provide written notice to its subcontractors to submit proof of business registration to the contractor; 2) prior to receipt of final payment from the contracting agency, a contractor must submit to the contracting agency an accurate list of all subcontractors or attest that none was used; 3) during the term of this contract, the contractor and its affiliates shall collect and remit, and shall notify all subcontractors and their affiliates that they must collect and remit to the Director, New Jersey Division of Taxation, the use tax due pursuant to the Sales and Use Tax Act, (N.J.S.A. 54:32B-1 et seq.) on all sales of tangible personal property delivered into this State.

A contractor, subcontractor or supplier who fails to provide proof of business registration or provides false business registration information shall be liable to a penalty or $25 for each day of violation, not to exceed $50,000 for each business registration not properly provided or maintained under a contract with the contracting agency. Information of the law and its requirements is available by calling (609)292-9292.

For Construction Contracts

N.J.S.A. 52:32-44 imposes the following requirements on contractors and all subcontractors that **knowingly** provide goods or perform services for a contractor fulfilling this contract:

1) The contractor shall provide written notice to its subcontractors and suppliers to submit proof of business registration to the contractor;
2) Subcontractors through all tiers of a project must provide written notice to their subcontractors and suppliers to submit proof of business registration and subcontractors shall collect proofs of business registration and maintain them on file;
3) Prior to receipt of final payment from a contracting agency, a contractor must submit to the contracting agency an accurate list of all subcontractors and suppliers or attest that none was used; and,
4) During the term of this contract, the contractor and its affiliates shall collect and remit, and shall notify all subcontractors and their affiliates that they must collect and remit, to the Director, New Jersey Division of Taxation, the use tax due pursuant to the Sales and Use Tax Act, (N.J.S.A. 52:32B-1 et seq.) on all sales of tangible personal property delivered into this State.

A contractor, subcontractor or supplier who fails to provide proof of business registration or provides false business registration information shall be liable to a penalty or $25 for each day of violation, not to exceed $50,000 for each business registration not properly provided or maintained under a contract with the contracting agency. Information of the law and its requirements is available by calling (609)292-9292.

Long Branch, New Jersey
ORDINANCE NO. 18-05

AN ORDINANCE TO AMEND AND SUPPLEMENT ORDINANCE NO. 13-05, KNOWN AS "AN ORDINANCE REQUIRING PUBLIC CONTRATING REFORM, AND AMENDING AND SUPPLEMENTING THE 'REVISED GENERAL ORDINANCES OF THE CITY OF LONG BRANCH, NEW JERSEY' ACCORDINGLY," AS ADOPTED ON MAY 10, 2005.

WHEREAS, on May 10, 2005, the City of Long Branch adopted Ordinance No. 13-05, known as "An Ordinance Requiring Public Contracting Reform, and Amending and Supplementing the 'Revised General Ordinances of the City of Long Branch, New Jersey' Accordingly" (the "Ordinance"); and

WHEREAS, the Ordinance places certain limitations upon the annual amount(s) of contributions that professionals may make to the political campaigns of the local elected officials who are ultimately responsible for the award of discretionary no-bid contracts for municipal professional services; and

WHEREAS, the intention of the Ordinance is to ensure trust in the process of local government, if not the quality or cost of services received, and to minimize any perceptions or concerns on the part of the public that discretionary no-bid contracts for municipal professional services are being awarded to professionals as a reward for having made substantial political contributions, or that the award of such contracts was influenced, even to a minor degree, by the payment of such contributions; and

WHEREAS, it is hereby found and declared that the practice of "wheeling," whereby one political organization channels campaign donations to another political organization with the intention to conceal or misrepresent the source of the contribution, may be utilized as a loophole to circumvent the proscriptions contained within the Ordinance; and

WHEREAS, the City Council of the City of Long Branch, in a continuing effort to ensure the integrity of the award of public professional service contracts, has therefore determined that it would be in the best interests of the City, and its residents, to amend the Ordinance in an attempt to curb the practice known as "wheeling;" and

WHEREAS, the City Council of the City of Long Branch also wishes to take this opportunity to clarify the "arbitration" provision referenced in Section 3(c) thereof; and

WHEREAS, the City Council of the City of Long Branch finds that it is in the best interest of the City and its residents to require that a contribution of more

than fifty dollars ($50.00) received by a candidate be reported in the manner set forth by the laws and regulations of the State of New Jersey.

NOW, THEREFORE, BE AND IT IS HEREBY ORDAINED, that Ordinance No. 13-05, known as "An Ordinance Requiring Public Contracting Reform, and Amending and Supplementing the 'Revised General Ordinances of the City of Long Branch, New Jersey' Accordingly," which was adopted on May 10, 2005, is hereby amended and supplemented as follows:

SECTION 1

Prohibition on Awarding Professional Contracts to Certain Contributors

(a) The City of Long Branch shall not enter into an agreement for professional services with any individual and/or professional business entity if that individual or entity has solicited or made any contribution of money or pledge of a contribution including in-kind contributions, to a campaign of any City of Long Branch candidate for Council or Mayor, in excess of the threshold specified in subsection (d) of this Section within one calendar year immediately preceding the date of the contract or agreement unless cured pursuant to Section 3. The prohibition set forth in this Paragraph shall also apply to any solicitation or contribution of money or pledge of a contribution including in-kind contributions made during the applicable time period to any City of Long Branch or Monmouth County Party Committee, or to any political action committee (PAC) that is organized for the primary purpose of promoting or supporting City of Long Branch candidates for Council or Mayor, so long as the solicitation or contribution was made with the intention on the part of the contributor to conceal or misrepresent the source of the contribution.

(b) No professional business entity which enters into negotiations for, or agrees to, any contact or agreement with the municipality or any department or agency thereof or any of its independent authorities for the rendition of professional services shall knowingly solicit or make any contribution of money, or pledge of a contribution, including in-kind contributions, to any City of Long Branch candidate or holder of public office having ultimate responsibility for the award of the contract, in excess of the amount set forth herein. This Section is to include any and all professionals who provide political contributions to any candidate for an office whether or not that candidate is presently in office or seeks office. The prohibition set forth in this Paragraph shall also apply to any solicitation or contribution of money or pledge of a contribution including in-kind contributions to any City of Long Branch or Monmouth County Party Committee, or to any political action committee (PAC) that is organized for the primary purpose of promoting or supporting City of Long Branch candidates for Council or Mayor, so long as the solicitation or contribution was made with the intention on the part of the contributor to conceal or misrepresent the source of the contribution.

(c) For purpose of this ordinance, a "professional business entity" seeking a public contract means an individual including the individual's spouse, if

any, and any child living at home; person; firm; corporation, professional corporation; partnership; organization; or association. The definition of a business entity includes all principals who own ten percent (10%) or more of the equity in the corporation or business trust, partners, and officers in the aggregate employed by the entity as well as any subsidiaries directly controlled by the business entity.

(d) Any individual meeting the definition of "professional business entity" under this section may annually contribute a maximum of five hundred dollars ($500.00) per candidate for Mayor and/or Council Member on an annual basis whether or not that individual has a professional services contract in place or not to the maximum extent of three thousand dollars ($3,000) per annum per business entity. This section shall apply to any presently sitting Councilperson and/or the Mayor of the City of Long Branch and shall also apply to any individual who seeks to run for the office of Council person and/or Mayor of the City of Long Branch.

(i) Any individual that owns less than ten (10%) percent of a professional business entity which contracts with the City of Long Branch shall not be treated as a part of that entity.

(e) For purposes of this section, the office that is considered to have ultimate responsibility for the award of the contract shall be:

(1) The City of Long Branch, if the contract requires approval or appropriation from the Council.

(2) The Mayor of the City of Long Branch, if the contract requires approval of the Mayor, or if a public officer who is responsible for the award of a contract is appointed by the Mayor.

SECTION 2
Contributions Made Prior to Effective Date

No contribution of money or any other thing of value, including in-kind contributions, made by a professional business entity to any municipal candidate for Mayor or Council, or to any municipal or county party committee, or to any political action committee (PAC) that is organized for the primary purpose of promoting or supporting City of Long Branch candidates for Council or Mayor, shall be deemed a violation of this section, nor shall an agreement for property, good or services, of any kind whatsoever, be disqualified thereby, if that contribution was made by the professional business entity prior to the effective date of this section.

SECTION 3
Penalty

(a) All City of Long Branch professional service agreements shall provide that it shall be a breach of the terms of the government contract for a professional business entity as defined in Section 1(c) to violate Section 1(b) or to knowingly conceal or misrepresent contributions given or received, or to make or solicit contributions through intermediaries for the purpose of concealing or misrepresenting the source of the contribution.

(b) Any professional business entity as defined in Section 1(c) and (d) who knowingly fails to reveal a contribution made in violation of this Act, or who knowingly makes or solicits contributions through intermediaries for the purpose of concealing or misrepresenting the source of the contribution, shall be subjected to a fine in the sum of $2,500 so far as the first offense and for any second offense, shall be disqualified from eligibility for future City of Long Branch contracts for a period of four calendar years from the date of the violation.

(c) There shall be no breach of contract in the event a contribution is questioned and as a result of the questioning of the contribution the individual and/or business entity who makes the contribution requests that the contribution be returned by the campaign committee, the candidate or the political action committee to whom such contribution was made. In the event of any disputes as to whether or not a campaign contribution is proper the matter shall be submitted to arbitration before a retired Judge of the Superior Court of New Jersey.

SECTION 4
Reporting Requirements

Any contribution received by a candidate committee, joint candidates committee, or political committee, during an election fund report period of more than fifty dollars ($50.00) or aggregate contributions received by such a committee in an election from a contributor totaling more than fifty dollars ($50.00) during such a report period shall be reported by providing the information set forth in N.J.A.C. 19:25-10.2

SECTION 5
Severability

If any provision of this law, or the application of any such provision to any person or circumstances, shall be held invalid, the remainder of this law to the extent it can be given effect, or the application of such provision to persons or circumstances other than those to which it is held invalid, shall not be affected thereby, and to this extent the provisions of this law are severable.

SECTION 6
Effective Date

This Ordinance shall take effect immediately upon final passage and publication in accordance with the law.

SECTION 7
Repealer

All other Ordinance or parts of Ordinances inconsistent herewith are hereby repealed to the extent of such inconsistency.

Introduced: 6/14/05
Adopted: 6/28/05

CNA

LAWYERS PROFESSIONAL LIABILITY POLICY
DECLARATIONS

Agency: 719383 | Branch: 912 | Policy Number: 268104556

Insurance is provided by Continental Insurance Company of New Jersey,
333 S. Wabash Ave. Chicago, IL 60604
A Stock Insurance Company.

1A. NAMED INSURED AND MAILING ADDRESS:
Mark R. Aikins, LLC
Autumn Ridge Office Park
3350 Route 138, Bldg. 1, Suite 113
Wall, NJ 07719

NOTICE TO POLICYHOLDERS:
This is a Claims Made and Reported policy. It applies only to those claims that are both first made against the insured and reported in writing to the Company during the policy period. Please review the policy carefully and discuss this coverage with your insurance agent or broker.

1B. PREDECESSOR FIRM(S): See Declarations Addendum

2. POLICY PERIOD:
Inception: 05/01/2008 Expiration: 05/01/2009
at 12:01 A.M. Standard Time at the address shown above

3. LIMITS OF LIABILITY:
Each Claim: $1,000,000
Aggregate: $1,000,000

Death or Disability and Non-Practicing Extended Reporting Period Limit of Liability:
Each Claim: $1,000,000
Aggregate: $1,000,000

4. DEDUCTIBLES:
Aggregate: $5,000

5. POLICY PREMIUM:

Annual Premium: $6,033.00

Surcharges/Taxes:
New Jersey Property & Liability Insurance Guaranty Association — **Amount:** $96.53

Total Amount Due: $6,129.53

Includes CNA Risk Management Seminar Credit of $ 0.00

6. FORMS AND ENDORSEMENTS ATTACHED AT INCEPTION:
G-118011-A (Ed. 07/2001), G-118012-A29 (Ed. 04/2001), G-118014-A29 (Ed. 10/2001), G-118018-A (Ed. 09/1996), G-118024-A (Ed. 09/1996), G-118029-A (Ed. 09/1996), G-118039-A29 (Ed. 04/2001), G-118064-A29 (Ed. 05/1997), G-145125-A (Ed. 08/2003), G-145184-A (Ed. 06/2003), G-18615-H (Ed. 10/2005)

7. WHO TO CONTACT:
To report a claim:
CNA Insurance Companies
40 Wall Street 9th floor
New York, NY 10005

Attn: Regional Director, GSL Lawyers Claims
Phone 212-440-3447 Fax 212-440-7050

Richard P. Taiston — APR 15 2008

Countersignature | **Date** | **Authorized Representative** | **Date**

STATE OF NEW JERSEY
BUSINESS REGISTRATION CERTIFICATE

DEPARTMENT OF TREASURY/
DIVISION OF REVENUE
PO BOX 269
TRENTON, NJ 08646-0252

TAXPAYER NAME:
MARK R. AIKINS, L.L.C.

TRADE NAME:

ADDRESS:
3350 RT 138 BLDG # 1 SUITE 113
WALL NJ 07719

SEQUENCE NUMBER:
1355120

EFFECTIVE DATE:
04/06/05

ISSUANCE DATE:
06/01/05

Director

FORM-BRC(08-01)

This Certificate is NOT assignable or transferable. It must be conspicuously displayed at above address.

Certification 37380

CERTIFICATE OF EMPLOYEE INFORMATION REPORT

INITIAL

This is to certify that the contractor listed below has submitted an Employee Information Report pursuant to N.J.A.C. 17:27-1.1 et seq. and the State Treasurer has approved said report. This approval will remain in effect for the period of 15-AUG-2005 to 15-AUG-2012

MARK R. AIKINS, L.L.C.
3350 ROUTE 138, BLDG. #1, STE. 113
WALL NJ 07719

State Treasurer

CITY OF LONG BRANCH
DOCUMENT SUBMISSION CHECKLIST

REQUIRED		READ, SIGNED & SUBMITTED
Yes	PROPOSAL AS REQUIRED IN RFQ	☒
Yes	STOCKHOLDER DISCLOSURE CERTIFICATION	☒
Yes	NON-COLLUSION AFFIDAVIT	☒
Yes	AFFIRMATIVE ACTION QUESTIONAIRE	☒

		REVIEWED
Yes	MANDATORY AFFIRMATIVE ACTION LANGUAGE	☒
Yes	AMERICANS WITH DISABLILITIES ACT OF 1990	☒
Yes	N. J. BUSINESS REGISTRATION LANGUAGE	☒
Yes	LONG BRANCH PAY TO PLAY ORDINANCE	☒

REQUIRED EVIDENCE
AFFIRMATIVE ACTION REGULATION
P.L. 1975, C. 127 (N.J.A.C. 17:27)

If awarded a contract, all procurement and service contractors will be required to comply with the requirements of P.L. 1975, c. 127, (N.J.A.C. 17:27). Within seven (7) days after receipt of the notification of intent to award the contract or receipt of the contract, whichever is sooner, the contractor should present one of the following to the Purchasing Agent.

1. A photocopy of a valid letter from the U.S. Department of Labor that the contractor has an existing federally-approved or sanctioned Affirmative Action Plan (good for one year from the date of the letter).

OR

2. A photocopy of approved Certificate of Employee Information Report from the State of New Jersey.

OR

3. An Affirmative Action Employee Information Report (Form AA302).

OR

4. All successful construction contractors must submit, within three days (3) of the signing of the contract, an Initial Project Manning Report (AA201) for any contract award that meets or exceeds the Public Agency bidding threshold (available upon request).

NO FIRM MAY BE ISSUED A CONTRACT UNLESS IT COMPLIES WITH THE AFFIRMATIVE ACTION REGULATIONS OF P.L. 1975, C. 127.

The following questions must be answered by all bidders:

1. Do you have a federally-approved or sanctioned Affirmative Action Program?

___Yes x No If yes, please submit copy of such approval.

2. Do you have a Certificate of Employee Information Report Approval?

x Yes ___No If yes, please submit copy of such certificate.

The undersigned contractor certifies that he is aware of the commitment to comply with the requirements of P.L. 1975, c. 127, and agrees to furnish the required documentation pursuant to law.

COMPANY: MARK R. AIKINS, LLC

SIGNATURE: _____

TITLE: MARK R. AIKINS, SOLE MEMBER

NOTE: A CONTRACTOR'S BID MUST BE REJECTED AS NON-RESPONSIVE IF A CONTRACTOR FAILS TO COMPLY WITH REQUIREMENTS OF P.L.1975, C. 127, WITHIN THE REQUIRED TIME FRAME.

STOCKHOLDER DISCLOSURE CERTIFICATION

If bidder is a sole proprietorship, check here _____
And do not complete this statement.

The UNDERSIGNED, as bidder, in accordance with P.L. 1977, Chapter 33, of the State of New Jersey, declares and submits this Statement of Ownership.

MARK R. AIKINS, LLC

Bidder is a Corporation ( ) Partnership ( ) (XX) Limited Liability Company

____ I certify that the list below contains the names and home addresses of all stockholders holding 10% or more of the issued and outstanding stock of the undersigned. (Use additional sheets in this format if necessary.)

____ I certify that no one stockholder owns 10% or more of the issued and outstanding stock of the undersigned.

Stockholder/Partner

Name_____ Name_____

Home Address_____ Home Address_____

_____ _____

Name_____ Name_____

Home Address_____ Home Address_____

_____ _____

Name_____ Name_____

Home Address_____ Home Address_____

_____ _____

(If a corporation or partnership is shown as an owner of 10% or more stock, you must attach a Stockholder Disclosure form for that corporation/partnership.)

THIS FORM MUST BE INCLUDED WITH BID SUBMISSION.

Subscribed and sworn
Before me this day

27, JUNE, 2008

Lydia D. Santacroce
Notary Public
LYDIA D. SANTACROCE
A NOTARY PUBLIC OF NEW JERSEY
MY COMMISSION EXPIRES: 10/08/11

_____
(Signature of Officer/Owner)

MARK R. AIKINS
An Attorney at Law of New Jersey

MARK R. AIKINS, SOLE MEMBER
(Name and Title)

NON-COLLUSION AFFIDAVIT

STATE OF NEW JERSEY

COUNTY OF MONMOUTH

I, MARK R. AIKINS, residing in Rumson, in the County of Monmouth and State of New Jersey of full age, being duly sworn according to law on my oath dispose and say that:

I, am Sole Member of the firm of MARK R. AIKINS, LLC, the bidder making this Proposal, Entitled LEGAL SERVICES POOL and that I executed the said proposal with full authority to do so, that said bidder has not, directly or indirectly entered into any agreement, participated in any collusion, or otherwise taken any action in restraint of free, competitive bidding in connection with the above named project; and that all statements contained in said proposal and in this affidavit are true and correct, and made with full knowledge that the **City of Long Branch** relies upon the truth of the statements contained in said Proposal, and in the statements contained in this affidavit, in awarding the contract for the said project.

I further warrant that no person or selling agency has been employed or retained to solicit or secure such contract upon an agreement or understanding for a commission, percentage, brokerage, or contingent fee, except bona fide employees or bona fide established commercial or selling agencies maintained by MARK R. AIKINS, LLC.

MARK R. AIKINS

Subscribed and sworn to
before me this day 27th
June, 2008

(signature of notary)

LYDIA D. SANTACROCE
A NOTARY PUBLIC OF NEW JERSEY
MY COMMISSION EXPIRES: 10/08/11

My Commission expires:

CITY OF LONG BRANCH, MUNICIPAL BUILDING, 344 BROADWAY, LONG BRANCH, N.J. 07740 (732) 571-5645

Howard H. Woolley, Jr
Business Administrator

TO: Council Members

FROM: Howard H. Woolley, Jr.
Business Administrator

RE: Contract for Legal Services Pool

DATE: July 2, 2008

After examining the proposals submitted to the City of Long Branch for Legal Services, it is the recommendation of the Mayor and Business Administrator to award a contract for legal services for the term of July 1, 2008 through June 30, 2009 to:

Greenbaum, Rowe, Smith & Davis, LLP
McKenna, Dupont, Higgins & Stone, PC
DiFrancesco, Bateman, Coley, Yospin, Kunzman, Davis & Lehrer
Mark R. Aikins, LLC
Maxwell Colby, Esquire

Based upon prior history, the City of Long Branch has determined that the above referenced attorneys have the experience, expertise and resources to provide the services required by the City of Long Branch.

HHW:gb

AGREEMENT
THIS AGREEMENT MADE THIS DAY OF

BETWEEN:

CITY OF LONG BRANCH
344 Broadway
Long Branch, NJ 07740

Hereinafter called the CITY

AND

Maxwell X. Colby
PO Box 334
Oakhurst, NJ 07755-0334

WITNESSETH:

WHEREAS, the City of Long Branch is desirous of retaining Maxwell X. Colby to provide legal services to aid the City; and

NOW, THEREFORE, in consideration for the execution of this Agreement and the supplying of services hereunder, the parties agree as follows:

1. This contract is awarded as an open-ended contract. During the term of the contract, a purchase order will be issued, with a not to exceed value, to authorize work for specific matters. No services are to be provided by the contractor prior to the date of the purchase order; further, the contractor may not provide services, nor bill for services, for costs exceeding the amount of the purchase order. It is the Contractor's responsibility to notify the City prior to providing services if there are insufficient funds left on a specific purchase order, and the insure that an amended or new purchase order has been issued by the City.

Contractor is required to bill for services on a monthly basis, at hourly rates as specified in its proposal. Bills are to be forwarded to the City Finance Office no later that twenty-one calendar days after the end of the calendar month, or the date of the contractor's monthly billing cycle.

2. Maxwell X. Colby agrees to provide services.

3. Contractor will submit billing and vouchers on a monthly basis.

4. The term of said contract shall be to June 30, 2009.

5. The City will not honor any of your invoices that exceed the contract amount unless, prior to you or your firm exceeding that amount you notify the City so that an amendment to your contract can be considered by the Mayor and Council, and, if appropriate, approved.

Due to the number of professional service contractors the City deals with, it is important for each contractor to recognize the limit of their contract, and advise the City Administrator and City Attorney of the need to continue service with an amendment to the contract.

The Administrator and Attorney would then make the appropriate recommendation to the City Council based upon the facts and circumstances, as they exist at that time.

However, please understand that this application must be made In advance of providing any services the cost of which would exceed the contract amount, and only after having an amended contract approved by resolution of City Council will you be

authorized to proceed.

6. The Contractor certifies it complies with Affirmative Action regulations. During the performance of this contract, the contractor agrees as follows:

The contractor or subcontractor, where applicable will not discriminate against any employee or applicant for employment because of age, race, creed, color, national origin, ancestry, marital status, affectional or sexual orientation, or sex. Except with respect to affectional or sexual orientation, the contractor will take affirmative action to ensure that such applicants are recruited and employed, and that employees are treated during employment, without regard to their age, race, creed, color, national origin, ancestry, marital status, affectional or sexual orientation or sex. Such action shall include, but not be limited to the following: employment, upgrading, demotion, or transfer; recruitment or recruitment advertising; layoff or termination; rates of pay or other
forms of compensation; and selection for training including apprenticeship. The contractor agrees to post in conspicuous places, available to employees and applicants for employment, notices to be provided by the Public Agency Compliance Officer, setting forth provisions of this non-discrimination clause.

The contractor or subcontractor, where applicable, will, in all solicitations or advertisements for employees placed by or on behalf of the contractor, state that all qualified applicants will receive consideration for employment without regard to their age, race, creed, color, national origin, ancestry, marital status, affectional or sexual orientation or sex.

The contractor or subcontractor, where applicable, agrees to comply with any regulations promulgated by the Treasurer pursuant to NJSA 10:5-36 et. seq. as amended and supplemented from time to time and the Americans with

Disabilities Act.

The contractor or subcontractor agrees to make good faith efforts to employ minority and women workers consistent with the applicable county employment goals established in accordance with NJAC 17:275.2, or a binding determination of the applicable county employment goals determined by the Division, pursuant to NJSA 17:275.2.

The contractor or subcontractor agrees to inform in writing it's appropriate recruitment agencies including, but not limited to, employment agencies, placement bureaus, colleges, universities, labor unions that it does not discriminate on the basis of age, creed, color, national origin, ancestry, marital status, affectional or sexual orientation or sex, and that it will discontinue the use of any recruitment agency which engages in direct or indirect discriminatory practices. The contractor or subcontractor agrees to revise any of its testing procedures, if necessary, to assure that all personnel testing conforms with the principals of job related testing, as established by the statutes and court decisions of the state of New Jersey and as established by applicable federal law and applicable federal court decisions.

In conforming with the applicable employment goals, the contractor or subcontractor agrees to review all procedures relating to transfer, upgrading, down grading and layoff to ensure that all such actions are taken without regard to age, creed, color, national origin, ancestry, marital status, sex, affectional or sexual orientation, and conform with the applicable employment goals, consistent with the statutes and court decisions of the state of New Jersey, and applicable federal law and applicable Federal court decisions.

The contractor and its subcontract shall furnish such reports or other documents to the Division of contract compliance and EEO as maybe requested by the office from time to time in order to carry out the purposes of these regulations, and public agency shall furnish information as may be requested by the Division of Contract Compliance and EEO for conducting a compliance investigation pursuant to subchapter 10 of the administrative code of NJAC17:27.

A contractor. subcontractor or supplier who fails to provide proof of business registration or provides false business registration information shall be liable to a penalty or $25 for each day of violation, not to exceed $50,000 for each business registration not properly provided or maintained under a contract with the contracting agency. Information of the law and its requirements is available by calling (609) 292-9292.

7. The City shall publish notice of said award of this agreement in the legal ad section of its official newspaper, and shall have on file for public inspection a copy of this contract and authorizing resolution as prescribed by law.

8. "The contractor, in executing this contract document, acknowledges that it complies with City Ordinance # 18-05, annexed hereto, and New Jersey ELEC laws, rules and regulations, and has not given any political contribution that would bar it from being awarded this contract."

9. Contractor is advised that the responsibility to file an annual disclosure statement on political contributions with the New Jersey Election Enforcement commission pursuant to N.J.S.A. 19:44A-20.3 (P .L. 205, c, 271, s.3), if the contractor receives contracts in excess of

$50,000 from public Entities in a calendar year. It is the contractor's responsibility to determine if filing is necessary. Additional information on this requirement is available from ELEC at 888-313-3532 or at www.elec.state.ni.us.

10. This Contract shall be binding upon the City has caused this instrument to be signed by ADAM SCHNEIDER, MAYOR attested by IRENE A. JOLINE, CLERK and the Municipal Seal to be hereunto affixed and the CONTRACTOR hereunto set their hand and seals, or caused these presents to be signed by their proper corporate officers and their proper corporate seal to be hereto affixed, the day and year first above mentioned.

ATTEST:

CITY OF LONG BRANCH

_____

Irene A. Joline, City Clerk

_____

Adam Schneider, Mayor

ATTEST:

BY:

_____

_____

LAW OFFICES
MAXWELL X. COLBY
MEMBER N.J. & N.Y. BARS
P.O. BOX 334
OAKHURST, NEW JERSEY 07755-0334
(732) 493-9333

OFFICE LOCATION:

FAX: (732) 493-8833
E-MAIL: MXCESQLAW@HOTMAIL.COM

901 WEST PARK AVENUE
SECOND FLOOR
OCEAN, NEW JERSEY 07712

June 24, 2008

Response To Request for Qualifications for Legal Services as Conflict Attorney(s)
Notice #FO-015-08

1. Complete indentifying information is provided in the above letterhead. There are no other offices or facilities maintained by this practice.
2. The Law Offices of Maxwell X. Colby has been in existence as an office for the general practice of law since March of 1983. This office has been in its present location since June of 1992. Prior to that, it was located at three different addresses along Monmouth Road in Oakhurst (212,215,220). Although as a sole practitioner, the undersigned has handled a wide range of legal matters, the practice now places an emphasis on real estate, land use, small business formations and transactions, and wills, estates, elder law, and administrative law. Outside of the office practice per se, the undersigned has served as Planning Board Attorney for the City of Long Branch (see items #4 and #6 below) as well as a Superior Court arbitrator, first in personal injury matters, and presently in

commercial litigation. The undersigned employs Deborah Donovan, a resident of Neptune Township, as his Legal Assistant, in which capacity she has served since January of 2001. The undersigned also employs Rosemarie Kelly, a resident of Long Branch, as a part-time receptionist.

3. The undersigned is the sole member of the firm.
4. As the sole member of the firm, the undersigned would have complete, non-delegable responsibility for all matters assigned by the City. In serving as Planning Board Attorney for the City of Long Branch from 1992 through 2001, the undersigned performed the customary services associated with the position of Planning Board Attorney. More importantly, being Planning Board Attorney meant extensive involvement with the Beachfront Redevelopment from its earliest conceptual stages, through the declaration and fact-finding process, and up to including the first round of approvals. There were also fairly substantial revisions made to the Land Use Ordinance, with revisions both applicable to the Redevelopment and more general land development and land use standards. The undersigned participating in the drafting of many of the modified provisions now found in the Land Use Ordinance. In addition, the undersigned has acquired an understanding of the broader field of municipal law as a whole (e.g. employment, taxation, licensing, environmental) in thirty years of practice.

5. Borough of Lake Como (South Belmar), 1740 Main Street, Lake Como, New Jersey 07719, 732.681.3232, Attention: Viveca Graham. The undersigned has served as substitute counsel to the Land Use Board on an occasional, non-contractual basis.

   Township of Ocean, 399 Monmouth Road, Oakhurst, New Jersey 07755, 732.531.5000, Attention: Andrew Brannen. The undersigned was been under contract as conflict counsel from August, 2005 through December 2007.

6. See # 4 above.
7. Current contracts: a. Conflict counsel, Long Branch Planning Board; b. Conflict counsel, Long Branch Zoning Board of Adjustment; c. Conflict counsel/Legal Services Pool, City of Long Branch.
8. Applicant would bill at the rate of $110/hr., but in no event any higher than the rate currently applicable to the City Attorney.
9. Current rate associated with both Planning Board and Zoning Board contracts is $125/hr. Current hourly rate for private clients is $250. No retainer is requested. All services, whether performed in office or in court, would be billed in 6 minute (.1 hr.) increments. No retainer would be required in the event litigation is assigned to the undersigned. The City's only other obligation would be reimbursement of actual filing fees and costs of litigation.
10. Proof of Insurance—Submitted herewith.

Respectfully submitted,

MAXWELL X. COLBY

ACORD™ CERTIFICATE OF LIABILITY INSURANCE

DATE (MM/DD/YYYY) 4/22/2008

PRODUCER (617)695-4500 FAX: (617)426-6642
First Indemnity Insurance
Lawyers Weekly Building
41 West Street, 5th Floor
Boston MA 02111

THIS CERTIFICATE IS ISSUED AS A MATTER OF INFORMATION ONLY AND CONFERS NO RIGHTS UPON THE CERTIFICATE HOLDER. THIS CERTIFICATE DOES NOT AMEND, EXTEND OR ALTER THE COVERAGE AFFORDED BY THE POLICIES BELOW.

INSURED
Maxwell X. Colby
901 West Park Avenue
Second Floor
Ocean NJ 07712

INSURERS AFFORDING COVERAGE	NAIC #
INSURER A: State National	
INSURER B:	
INSURER C:	
INSURER D:	
INSURER E:	

COVERAGES

THE POLICIES OF INSURANCE LISTED BELOW HAVE BEEN ISSUED TO THE INSURED NAMED ABOVE FOR THE POLICY PERIOD INDICATED. NOTWITHSTANDING ANY REQUIREMENT, TERM OR CONDITION OF ANY CONTRACT OR OTHER DOCUMENT WITH RESPECT TO WHICH THIS CERTIFICATE MAY BE ISSUED OR MAY PERTAIN, THE INSURANCE AFFORDED BY THE POLICIES DESCRIBED HEREIN IS SUBJECT TO ALL THE TERMS, EXCLUSIONS AND CONDITIONS OF SUCH POLICIES. AGGREGATE LIMITS SHOWN MAY HAVE BEEN REDUCED BY PAID CLAIMS.

INSR LTR	ADD'L INSRD	TYPE OF INSURANCE	POLICY NUMBER	POLICY EFFECTIVE DATE (MM/DD/YY)	POLICY EXPIRATION DATE (MM/DD/YY)	LIMITS	
		GENERAL LIABILITY				EACH OCCURRENCE	$
		COMMERCIAL GENERAL LIABILITY				DAMAGE TO RENTED PREMISES (Ea occurrence)	$
		CLAIMS MADE / OCCUR				MED EXP (Any one person)	$
						PERSONAL & ADV INJURY	$
						GENERAL AGGREGATE	$
		GEN'L AGGREGATE LIMIT APPLIES PER: POLICY / PRO-JECT / LOC				PRODUCTS - COMP/OP AGG	$
		AUTOMOBILE LIABILITY				COMBINED SINGLE LIMIT (Ea accident)	$
		ANY AUTO					
		ALL OWNED AUTOS				BODILY INJURY (Per person)	$
		SCHEDULED AUTOS					
		HIRED AUTOS				BODILY INJURY (Per accident)	$
		NON-OWNED AUTOS					
						PROPERTY DAMAGE (Per accident)	$
		GARAGE LIABILITY				AUTO ONLY - EA ACCIDENT	$
		ANY AUTO				OTHER THAN AUTO ONLY: EA ACC	$
						AGG	$
		EXCESS/UMBRELLA LIABILITY				EACH OCCURRENCE	$
		OCCUR / CLAIMS MADE				AGGREGATE	$
							$
		DEDUCTIBLE					$
		RETENTION $					$
		WORKERS COMPENSATION AND EMPLOYERS' LIABILITY				WC STATU-TORY LIMITS / OTH-ER	
		ANY PROPRIETOR/PARTNER/EXECUTIVE OFFICER/MEMBER EXCLUDED?				E.L. EACH ACCIDENT	$
		If yes, describe under SPECIAL PROVISIONS below				E.L. DISEASE - EA EMPLOYEE	$
						E.L. DISEASE - POLICY LIMIT	$
A		OTHER Lawyers Professional Liability	SLA0008754	4/17/2008	4/17/2009	Aggregate	$1,000,000
						Per Claim	$500,000
						Deductible	$1,000

DESCRIPTION OF OPERATIONS/LOCATIONS/VEHICLES/EXCLUSIONS ADDED BY ENDORSEMENT/SPECIAL PROVISIONS

This is a Claims Made Policy Covering 1 Attorney, Retro-Date 04/17/2008.

Claims Expenses are Outside the Limits of Liability and First Dollar Defense.

CERTIFICATE HOLDER

Insured

CANCELLATION

SHOULD ANY OF THE ABOVE DESCRIBED POLICIES BE CANCELLED BEFORE THE EXPIRATION DATE THEREOF, THE ISSUING INSURER WILL ENDEAVOR TO MAIL 10 DAYS WRITTEN NOTICE TO THE CERTIFICATE HOLDER NAMED TO THE LEFT, BUT FAILURE TO DO SO SHALL IMPOSE NO OBLIGATION OR LIABILITY OF ANY KIND UPON THE INSURER, ITS AGENTS OR REPRESENTATIVES.

AUTHORIZED REPRESENTATIVE

© ACORD CORPORATION 1988

STATE OF NEW JERSEY
BUSINESS REGISTRATION CERTIFICATE

Taxpayer Name:	COLBY,MAXWELL X
Trade Name:	
Address:	901 W PARK AV OCEAN, NJ 07712
Certificate Number:	0474048
Date of Issuance:	October 26, 2005

For Office Use Only:

20051026183009058

RECEIVED
OCT 27 2005
CITY OF LONG BRANCH
PURCHASING OFFICE

STOCKHOLDER DISCLOSURE CERTIFICATION

If bidder is a sole proprietorship, check here X
And do not complete this statement.

The UNDERSIGNED, as bidder, in accordance with P.L. 1977, Chapter 33, of the State of New Jersey, declares and submits this Statement of Ownership.

Bidder is a Corporation ( ) Partnership ( )

____ I certify that the list below contains the names and home addresses of all stockholders holding 10% or more of the issued and outstanding stock of the undersigned. (Use additional sheets in this format if necessary.)

____ I certify that no one stockholder owns 10% or more of the issued and outstanding stock of the undersigned.

Stockholder/Partner

Name_____ Name_____

Home Address_____ Home Address_____

_____ _____

Name_____ Name_____

Home Address_____ Home Address_____

_____ _____

Name_____ Name_____

Home Address_____ Home Address_____

_____ _____

(If a corporation or partnership is shown as an owner of 10% or more stock, you must attach a Stockholder Disclosure form for that corporation/partnership.)

THIS FORM MUST BE INCLUDED WITH BID SUBMISSION.

Subscribed and sworn
Before me this day

June 23rd, 2008

Deborah Donovan
Notary Public of New Jersey
My commission expires: May 31, 2011
DEBORAH DONOVAN

_____
(Signature of Officer/Owner)

Maxwell X. Colby
Attorney-at-law of New Jersey
(Name and Title)

(CORPORATE SEAL)

NON-COLLUSION AFFIDAVIT

STATE OF NEW JERSEY
COUNTY OF MONMOUTH

I, Maxwell X. Colby residing in Township of Ocean
(name of municipality)

in the County of Monmouth and State of New Jersey of full age,

being duly sworn according to law on my oath dispose and say that:

I, am owner/sole proprietor of the firm of Law Offices of Maxwell X. Colby
(title or position) (name of firm)

the bidder making this Proposal for the bid proposal entitled FO-015-08 Legal Services Pool
(title of bid proposal)
, and that I executed the said proposal with full authority to do so,

that said bidder has not, directly or indirectly entered into any agreement, participated in any collusion, or otherwise taken any action in restraint of free, competitive bidding in connection with the above named project; and that all statements contained in said proposal and in this affidavit are true and correct, and made with full knowledge that the **City of Long Branch** relies upon the truth of the statements contained in said Proposal, and in the statements contained in this affidavit, in awarding the contract for the said project.

I further warrant that no person or selling agency has been employed or retained to solicit or secure such contract upon an agreement or understanding for a commission, percentage, brokerage, or contingent fee, except bona fide employees or bona fide established commercial or selling agencies maintained by Law Offices of Maxwell X. Colby
(name of firm)

(signature of affiant)

Subscribed and sworn to
before me this day the
23rd of June 2008

Deborah Donovan
(signature of notary) Notary Public of NJ
DEBORAH DONOVAN

My Commission expires: May 31, 2011

REQUIRED EVIDENCE
AFFIRMATIVE ACTION REGULATION
P.L. 1975, C. 127 (N.J.A.C. 17:27)

If awarded a contract, all procurement and service contractors will be required to comply with the requirements of P.L. 1975, c. 127, (N.J.A.C. 17:27). Within seven (7) days after receipt of the notification of intent to award the contract or receipt of the contract, whichever is sooner, the contractor should present one of the following to the Purchasing Agent.

1. A photocopy of a valid letter from the U.S. Department of Labor that the contractor has an existing federally-approved or sanctioned Affirmative Action Plan (good for one year from the date of the letter).

OR

2. A photocopy of approved Certificate of Employee Information Report from the State of New Jersey.

OR

3. An Affirmative Action Employee Information Report (Form AA302).

OR

4. All successful construction contractors must submit, within three days (3) of the signing of the contract, an Initial Project Manning Report (AA201) for any contract award that meets or exceeds the Public Agency bidding threshold (available upon request).

NO FIRM MAY BE ISSUED A CONTRACT UNLESS IT COMPLIES WITH THE AFFIRMATIVE ACTION REGULATIONS OF P.L. 1975, C. 127.

The following questions must be answered by all bidders:

1. Do you have a federally-approved or sanctioned Affirmative Action Program?

___Yes _X_No If yes, please submit copy of such approval.

2. Do you have a Certificate of Employee Information Report Approval?

___Yes _X_No If yes, please submit copy of such certificate.

The undersigned contractor certifies that he is aware of the commitment to comply with the requirements of P.L. 1975, c. 127, and agrees to furnish the required documentation pursuant to law.

COMPANY: LAW OFFICES - F M AXWORZ & COLBY

SIGNATURE: [signature]

TITLE: ~~MAN~~ OWNER

NOTE: A CONTRACTOR'S BID MUST BE REJECTED AS NON-RESPONSIVE IF A CONTRACTOR FAILS TO COMPLY WITH REQUIREMENTS OF P.L.1975, C. 127, WITHIN THE REQUIRED TIME FRAME.

Form AA302
Rev. 1/00

STATE OF NEW JERSEY

Division of Contract Compliance & Equal Employment Opportunity

EMPLOYEE INFORMATION REPORT

For Instructions on completing the form, go to: http://www.state.nj.us/treasury/contract_compliance/pdf/aa302ins.pdf

SECTION A - COMPANY IDENTIFICATION

1. FID. NO. OR SOCIAL SECURITY	2. TYPE OF BUSINESS	3. TOTAL NO. EMPLOYEES IN THE ENTIRE COMPANY
224-446-61	☐ 1. MFG ☐ 2. SERVICE ☐ 3. WHOLESALE ☐ 4. RETAIL ☐ 5. OTHER	2

4. COMPANY NAME
Law Offices of Maxwell X. Colby

5. STREET	CITY	COUNTY	STATE	ZIP CODE
901 West Park Avenue	Ocean	Monmouth	NJ	07712

6. NAME OF PARENT OR AFFILIATED COMPANY (IF NONE, SO INDICATE)	CITY	STATE	ZIP CODE
None			

7. CHECK ONE: IS THE COMPANY: ☒ SINGLE-ESTABLISHMENT EMPLOYER ☐ MULTI-ESTABLISHMENT EMPLOYER

8. IF MULTI-ESTABLISHMENT EMPLOYER, STATE THE NUMBER OF ESTABLISHMENTS IN NJ

9. TOTAL NUMBER OF EMPLOYEES AT ESTABLISHMENT WHICH HAS BEEN AWARDED THE CONTRACT 2

10. PUBLIC AGENCY AWARDING CONTRACT

	CITY	COUNTY	STATE	ZIP CODE
City of Long Branch	Long Branch	Monmouth	NJ	07740

Official Use Only	DATE RECEIVED	INAUG.DATE	ASSIGNED CERTIFICATION NUMBER

SECTION B - EMPLOYMENT DATA

11. Report all permanent, temporary and part-time employees ON YOUR OWN PAYROLL. Enter the appropriate figures on all lines and in all columns. Where there are no employees in a particular category, enter a zero. Include ALL employees, not just those in minority/non-minority categories, in columns 1, 2, & 3. *DO NOT SUBMIT* AN EEO-1 REPORT.

JOB CATEGORIES	ALL EMPLOYEES COL. 1 TOTAL (Cols.2 &3)	COL. 2 MALE	COL. 3 FEMALE	PERMANENT MINORITY/NON-MINORITY EMPLOYEE BREAKDOWN ********* MALE********** BLACK	HISPANIC	AMER. INDIAN	ASIAN	NON MIN.	**********FEMALE********** BLACK	HISPANIC	AMER. INDIAN	ASIAN	NON MIN.
Officials/ Managers													
Professionals													
Technicians													
Sales Workers													
Office & Clerical	1		1										1
Craftworkers (Skilled)													
Operatives (Semi-skilled)													
Laborers (Unskilled)													
Service Workers													
TOTAL													
Total employment From previous Report (if any)													
Temporary & Part-Time Employees	The data below shall NOT be included in the figures for the appropriate categories above.												
	1		1										1

12. HOW WAS INFORMATION AS TO RACE OR ETHNIC GROUP IN SECTION B OBTAINED?
☒ 1. Visual Survey ☐ 2. Employment Record ☐ 3. Other (Specify)

13. DATES OF PAYROLL PERIOD USED
From: 06/16/2008 To: 06/20/2008

14. IS THIS THE FIRST Employee Information Report Submitted?
1. YES ☒ 2. NO ☐

15. IF NO, DATE LAST REPORT SUBMITTED
MO. DAY YEAR

SECTION C - SIGNATURE AND IDENTIFICATION

16. NAME OF PERSON COMPLETING FORM (Print or Type)	SIGNATURE	TITLE	DATE MO	DAY	YEAR
Maxwell X. Colby	-	Owner	06	23	2008

17. ADDRESS NO. & STREET	CITY	COUNTY	STATE	ZIP CODE	PHONE (AREA CODE, NO., EXTENSION)
901 West Park Avenue	Ocean	Monmouth	NJ	07712	732 - 493 - 9333

CITY OF LONG BRANCH
DOCUMENT SUBMISSION CHECKLIST

REQUIRED		READ, SIGNED & SUBMITTED
Yes	PROPOSAL AS REQUIRED IN RFQ	☒
Yes	STOCKHOLDER DISCLOSURE CERTIFICATION	☒
Yes	NON-COLLUSION AFFIDAVIT	☒
Yes	AFFIRMATIVE ACTION QUESTIONAIRE	☒

		REVIEWED
Yes	MANDATORY AFFIRMATIVE ACTION LANGUAGE	☒
Yes	AMERICANS WITH DISABLILITIES ACT OF 1990	☒
Yes	N. J. BUSINESS REGISTRATION LANGUAGE	☒
Yes	LONG BRANCH PAY TO PLAY ORDINANCE	☒

CITY OF LONG BRANCH, MUNICIPAL BUILDING, 344 BROADWAY, LONG BRANCH, N.J. 07740 (732) 571-5645

Howard H. Woolley, Jr
Business Administrator

TO: Council Members

FROM: Howard H. Woolley, Jr.
Business Administrator

RE: Contract for Legal Services Pool

DATE: July 2, 2008

After examining the proposals submitted to the City of Long Branch for Legal Services, it is the recommendation of the Mayor and Business Administrator to award a contract for legal services for the term of July 1, 2008 through June 30, 2009 to:

Greenbaum, Rowe, Smith & Davis, LLP
McKenna, Dupont, Higgins & Stone, PC
DiFrancesco, Bateman, Coley, Yospin, Kunzman, Davis & Lehrer
Mark R. Aikins, LLC
Maxwell Colby, Esquire

Based upon prior history, the City of Long Branch has determined that the above referenced attorneys have the experience, expertise and resources to provide the services required by the City of Long Branch.

HHW:gb

R# 125-08

RESOLUTION AUTHORIZING CONTRACTS FOR APPRAISAL SERVICES POOL FOR THE CONTRACT YEAR JULY 1, 2008 THROUGH JUNE 30, 2009

WHEREAS, the City of Long Branch has the need to contract with appraisal firms to provide real estate appraisal services and potential expert witness testimony in various court actions for the contract year July 1, 2008 through June 30, 2009, and has determined that it is in the City's best interest to establish a pre-approved pool of qualified appraisal firms from which to award contracts; and

WHEREAS, the City, through a Fair and Open Process, advertised on its website the solicitation for receipt of qualifications from appraisal firms for said services, publicly opened and read on June 30, 2008 (Fair and Open #016-08), and the following firms submitted a qualifications:

Gagliano Appraisal, LLC, Shrewsbury, NJ
McGuire Associates, LLC, Jersey City, NJ
Johnson Realty Services, Sea Girt, NJ

WHEREAS, the qualification submissions from Gagliano Appraisal, McGuire Associates, and Johnson Realty Services were reviewed by the Mayor and Business Administrator, and it was determined that each of the firms have adequate experience, staffing, and resources to be considered for appraisal assignments that the City may require during the coming contract year, and further the Mayor and Administrator have recommended that these firms be included in the 2008-2009 Appraisal Services Pool and awarded open-ended contracts; and

WHEREAS, all contractors awarded professional services contracts are required to comply with City Ordinance #18-05, and by execution of the contract documents and Political Contribution Affidavit, each firm acknowledges that it complies with the Ordinance and has not made any political contributions that would bar it from being awarded a contract with the City of Long Branch; and

WHEREAS, in accordance with Local Public Contracts Law, the City may authorize open-ended contracts to these firms, based upon availability of funds, and with the provision of certification of funds provided by issuance of a Purchase Order prior to any work being assigned or performed.

NOW THEREFORE BE IT RESOLVED that the City Council of the City of Long Branch hereby authorizes establishment of an Appraisal Services Pool, and awards open ended contracts to **Gagliano Appraisal, LLC, McGuire Associates, LLC, and Johnson Realty Services,** for such real estate appraisal services as may be required and assigned by the City for the term from July 1, 2008 through June 30, 2009, in accordance with the Request for Qualifications, proposals, and contract documents annexed hereto.

BE IT FURTHER RESOLVED that any and all work that may be assigned to any of the firms by the Department of Administration, either through solicitation of project proposals, wherever practicable, or based upon specific qualifications and/or recommendation of the City Attorney, as deemed in the City's best interest, shall be subject to availability of funds, and said assignment authorized by issuance of a purchase order prior to any work being assigned or performed.

AGREEMENT

THIS AGREEMENT MADE THIS DAY OF ,

BETWEEN: **CITY OF LONG BRANCH**
344 Broadway
Long Branch, NJ 07740

Hereinafter called the **CITY**

AND

GAGLIANO APPRAISAL, LLC
1129 BROAD STREET
SUITE 101
SHREWSBURY, NJ 07702

WITNESSETH:

WHEREAS, the City of Long Branch is desirous of retaining Gagliano Appraisal, LLC to provide real estate appraisal services and potential expert witness testimony in various court in accordance with the proposal attached hereto.

NOW, THEREFORE, in consideration for the execution of this Agreement and the supplying of services hereunder, the parties agree as follows:

This contract is awarded as an open ended contract. During the term of the contract, a purchase order will be issued, with a not to exceed value, to authorize work for specific matters.
No services are to be provided by the contractor prior to the date of the purchase order; further, the contractor may not provide services, nor bill for services, for costs exceeding the amount of the purchase order. It is the Contractor's responsibility to notify the City prior to providing services if there are insufficient funds left
on a specific purchase order, and the insure that an amended or new purchase order has been issued by the City.

Contractor is required to bill for services on a monthly basis, at hourly rates as specified in its proposal. *Bills are to be forwarded to the City Finance Office no later that twenty-one calendar days after the end of the calendar month, or the date of the contractor's monthly billing cycle.*

1. Gagliano Appraisal , LLC agrees to provide services.

2. Contractor will submit billing and vouchers on a monthly basis.

3. The term of said contract shall be July 1, 2008 through June 30, 2009.

4. The City will not honor any of your invoices that exceed the contract amount unless, prior to you or your firm exceeding that amount, you notify the City so that an amendment to your contract can be considered by the Mayor and Council, and, if appropriate, approved.

Due to the number of professional service contractors the City deals with, it is important for each contractor to recognize the limit of their contract, and advise the City Administrator and City Attorney of the need to continue service with an amendment to the contract.

The Administrator and Attorney would then make the appropriate recommendation to the City Council based upon the facts and circumstances, as they exist at that time.

However, please understand that this application must be made **in advance of providing any services** the cost of which would exceed the contract amount, and only after having an amended contract approved by resolution of City Council will you be authorized to proceed.

5. The Contractor certifies it complies with Affirmative Action regulations. During the performance of this contract, the contractor agrees as follows:

The contractor or subcontractor, where applicable will not discriminate against any employee or applicant for employment because of age, race, creed, color, national origin, ancestry, marital status, affectional or sexual orientation, or sex. Except with respect to affectional or sexual orientation, the contractor will take affirmative action to ensure that such applicants are recruited and employed, and that employees are treated during employment, without regard to their age, race, creed, color, national origin, ancestry, marital status, affectional or sexual orientation or sex. Such action shall include, but not be limited to the following: employment, upgrading, demotion, or transfer; recruitment or recruitment advertising; layoff or termination; rates of pay or other forms of compensation; and selection for training including apprenticeship. The contractor agrees to post in conspicuous places, available to employees and applicants for employment, notices to be provided by the Public Agency Compliance Officer, setting forth provisions of this non-discrimination clause.

The contractor or subcontractor, where applicable, will, in all solicitations or advertisements for employees placed by or on behalf of the contractor, state that all qualified applicants will receive consideration for employment without regard to their age, race, creed, color, national origin, ancestry, marital status, affectional or sexual orientation or sex.

The contractor or subcontractor, where applicable, will send to each labor union or representative of workers with which it has a collective bargaining agreement or other contract or understanding, a notice, to be provided by the agency contracting officer, advising the labor union or workers' representative

of the contractor's commitments under this act and shall post copies of the notice in conspicuous places available to employees and applicants for employment.

The contractor or subcontractor, where applicable, agrees to comply with any regulations promulgated by the Treasurer pursuant to NJSA 10:5-36 et. seq. as amended and supplemented from time to time and the Americans with Disabilities Act.

The contractor or subcontractor agrees to make good faith efforts to employ minority and women workers consistent with the applicable county employment goals established in accordance with NJAC 17:275.2, or a binding determination of the applicable county employment goals determined by the Division, pursuant to NJSA 17:275.2.

The contractor or subcontractor agrees to inform in writing its appropriate recruitment agencies including, but not limited to, employment agencies, placement bureaus, colleges, universities, labor unions, that it does not discriminate on the basis of age, creed, color, national origin, ancestry, marital status, affectional or sexual orientation or sex, and that it will discontinue the use of any recruitment agency which engages in direct or indirect discriminatory practices. The contractor or subcontractor agrees to revise any of its testing procedures, if necessary, to assure that all personnel testing conforms with the principals of job related testing, as established by the statutes and court decisions of the state of New Jersey and as established by applicable federal law and applicable federal court decisions.

In conforming with the applicable employment goals, the contractor or subcontractor agrees to review all procedures relating to transfer, upgrading, down grading and lay off to ensure that all such actions are taken without regard to age, creed, color, national origin, ancestry, marital status, sex, affectional or sexual orientation, and conform with the applicable employment goals, consistent with the statutes and court decisions of the state of New Jersey, and applicable federal law and applicable Federal court decisions.

The contractor and its subcontract shall furnish such reports or other documents to the Division of contract compliance and EEO as maybe requested by the office from time to time in order to carry out the purposes of these regulations, and public agency shall furnish information as may be requested by the Division of Contract Compliance and EEO for conducting a compliance investigation pursuant to subchapter 10 of the administrative code of NJAC 17:27.

A contractor, subcontractor or supplier who fails to provide proof of business registration or provides false business registration information shall be liable to a penalty or $25 for each day of violation, not to exceed $50,000 for

each business registration not properly provided or maintained under a contract with the contracting agency. Information of the law and its requirements is available by calling (609)292-9292.

6. The City shall publish notice of said award of this agreement in the legal ad section of its official newspaper, and shall have on file for public inspection a copy of this contract and authorizing resolution as prescribed by law.

7. "The contractor, in executing this contract document, acknowledges that it complies with City Ordinance # 18-05, annexed hereto, and New Jersey ELEC laws, rules and regulations, and has not given any political contribution that would bar it from being awarded this contract."

8. Contractor is advised that the responsibility to file an annual disclosure statement on political contributions with the New Jersey Election Enforcement commission pursuant to N.J.S.A. 19:44A-20.3 (P.L. 205, c, 271, s.3), if the contractor receives contracts in excess of $50,000 from public Entities in a calendar year. It is the contractor's responsibility to determine if filing is necessary. Additional information on this requirement is available from ELEC at 888-313-3532 or at www.elec.state.nj.us.

9. This Contract shall be binding upon the City has caused this instrument to be signed by **ADAM SCHNEIDER, MAYOR** attested by **IRENE A. JOLINE, CLERK** and the Municipal Seal to be hereunto affixed and the **CONTRACTOR** hereunto set their hand and seals, or caused these presents to be signed by their proper corporate officers and their proper corporate seal to be hereto affixed, the day and year first above mentioned.

CITY OF LONG BRANCH

by:_____
Adam Schneider, Mayor

Attested by:

Date:_____

_____
Irene A. Joline, RMC
City Clerk

CONTRACTOR
By:_____

Title:_____

Attested by:

_____

Dated:_____

CITY OF LONG BRANCH
Request for Qualifications
For Professional Service Contract

Notice is hereby given that, in accordance with N.J.S.A. 19:44-20.5, et seq, through a fair and open process, the City of Long Branch, County of Monmouth, State of New Jersey, is requesting sealed proposals/submissions for the following Professional Service(s):

Notice #FO-016-08
Date of Receipt of Proposal: Monday, June 30, 2008, at 2 pm prevailing time
Proposal for: Appraisal Services Pool for 2008-2009

Proposal/Submission packages are available at the Purchasing Office, 344 Broadway, Long Branch, NJ during normal business hours, or by calling 732-571-5656, or fax request to 732-222-1516. Sample proposal/submission package is also on file for viewing in the Office of the City Clerk.

Proposal/Submissions will be publicly opened and read by the Purchasing Agent, or designated representative, at Long Branch Municipal Building, Council Caucus Room, Second Floor, 344 Broadway, Long Branch, NJ, on the date and time noted above. Firms unable to be present for the opening of proposals may mail proposal package to the attention of the City Clerk at the above address.

Professional service contractors are required to comply with the requirements of N.J.S.A. 10:5-31 et seq, and N.J.A.C. 17:27 et seq., PL 2004, c.19, and Long Branch Pay to Play Ordinance.

Successful contractors will be required to provide, prior to award of the contract, their Affirmative Action documentation, New Jersey Business Registration (Form NJ BUS REG). Successful contractor will also be required to comply with all terms imposed by NJ Elections Laws subject to campaign funding limits, and with Long Branch Pay to Play Ordinance.

Proposals will be reviewed and award of contract will be based upon the following criteria:

- Experience and reputation of the firm in the field of real estate appraisals in New Jersey, and more specifically, of the Monmouth County shore area.

- Qualifications of the individuals who will perform the required services, and their respective participation.

- Experience of the individuals as it relates to the particular expertise required to perform the contract.

- Ability of the firm to perform the services on a timely basis, including staffing and familiarity with the subject matter.

- Experience with or specific knowledge the City of Long Branch as it pertains to this contract.

- References

- Cost consideration, including, but not limited to fee schedule to be charged, fees paid by public entities of similar size and make-up, for comparable level of services, and if applicable, cost that would be incurred by the City to contract with a new firm (i.e. estimated cost for current firm to review and close out all files, and new firm to review and get up to speed on all open files).

Successful candidates chosen from respondents will be issued open-ended master contracts, and, during the contract year of July 1, 2008 through June 30, 2009, may be requested to provide appraisal services as may be required by the City. These contracts do not guarantee that any work will actually be awarded to any, or to all, of the successful candidates.

In the event that a member of the appraisal services pool, due to a conflict concern, should disqualify itself from consideration for a contract for a specific matter, that shall not adversely affect inclusion in the pool for consideration for future contracts during the contract year.

Contract assignments for specific appraisals will be awarded on an as needed basis to individual firms based upon the required expertise as it applies to the appraisal needed, ability to perform within the required timeframe, and evaluation of a proposals provided by the firm for each appraisal task. Contract assignments will be awarded upon recommendation of the Department of Administration, and each contract will be authorized by issuance of a purchase order. <u>No work may be authorized or services provided prior to the purchase order date</u>.

Request for Qualifications for Appraisal Services

The City of Long Branch will receive qualifications from appraisal firms to provide real estate appraisal services as may be required during the contract year. The services that may be required could include, but are not limited to, residential, commercial and/or hotel appraisals, including water or oceanfront properties, New Jersey Department of Environmental Protection Green Acres real estate appraisals, expert witness testimony regarding property appraisals relative to Monmouth County Board of Taxation Property Tax Appeals and/or New Jersey State Tax Court, or in any other legal proceedings, and expert testimony regarding property appraisals relative to property condemnations in Monmouth County Superior Court, Condemnation Commission, or in any other legal proceedings.

Qualifications submission must include all of the following:

1. Name, address, phone and fax number of firm. (if multiple office sites, list all, and indicate corporate office).

2. Biography or history of the firm; staffing (i.e. number of licensed appraisers, and other technical or clerical staff).

3. List of principals and/or partners.

4. List of appraisers that would be assigned to Long Branch matters, including a summary of their educations, qualifications, expertise and experience as it relates to the various areas of appraisal services the City may require. Indicate the approximate percentage of work each would be assigned. The principals or partners assigned to Long Branch must have a minimum of 10 years experience in New Jersey real estate property appraisals.

5. List of References from at least 2 municipalities for which the firm has provided similar services, including name, address, phone and contact information.

6. Provide prior experience, if any, the firm may have providing services to the City of Long Branch, and in what capacity.

7. List of municipalities currently under contract with the firm.

8. Provide a fee schedule by title for all firm members and employees. Indicate which fees would apply for attorneys and employees assigned to Long Branch matters.

9. Provide a schedule of any and all other fees routinely charged by the firm for during the course of providing services.

10. Copy of current Certificate of Insurance for Professional Liability coverage.

One original and four (4) photocopies of the submission package must be submitted to the City for consideration. In addition to the above required information, respondents must provide all documents indicated on the Submission Package Check List. Failure to provide all required documents may result in the proposal not being considered.

Additional Pay to Play Requirements

Contractors are advised of the responsibility to file an annual disclosure statement on political contributions with the New Jersey Election Enforcement Commission, pursuant to N.J.S.A. 19:44-20.13 (P.L. 2005, c, 271, s.3), if the contractor receives contracts in excess of $50,000 in the aggregate from public entities in a calendar year. It is the contractor's responsibility to determine if filing is necessary. The report is due March 30 of each year for reporting for prior year contracts. Additional information on this requirement is available from ELEC at 888-313-3532 or at www.elec.state.nj.us.

CITY OF LONG BRANCH
DOCUMENT SUBMISSION CHECKLIST

REQUIRED		READ, SIGNED & SUBMITTED
Yes	PROPOSAL AS REQUIRED IN RFQ	☐
Yes	STOCKHOLDER DISCLOSURE CERTIFICATION	☐
Yes	NON-COLLUSION AFFIDAVIT	☐

		REVIEWED
Yes	MANDATORY AFFIRMATIVE ACTION LANGUAGE	☐
Yes	AMERICANS WITH DISABLILITIES ACT OF 1990	☐
Yes	N. J. BUSINESS REGISTRATION REQUIREMENTS	☐
Yes	LONG BRANCH PAY TO PLAY ORDINANCE	☐

STOCKHOLDER DISCLOSURE CERTIFICATION

If bidder is a sole proprietorship, check here _____
And do not complete this statement.

The UNDERSIGNED, as bidder, in accordance with P.L. 1977, Chapter 33, of the State of New Jersey, declares and submits this Statement of Ownership.

Bidder is a Corporation ( ) Partnership ( )

____ I certify that the list below contains the names and home addresses of all stockholders holding 10% or more of the issued and outstanding stock of the undersigned. (Use additional sheets in this format if necessary.)

____ I certify that no one stockholder owns 10% or more of the issued and outstanding stock of the undersigned.

Stockholder/Partner

Name_____ Name_____

Home Address_____ Home Address_____

_____ _____

Name_____ Name_____

Home Address_____ Home Address_____

_____ _____

Name_____ Name_____

Home Address_____ Home Address_____

_____ _____

(If a corporation or partnership is shown as an owner of 10% or more stock, you must attach a Stockholder Disclosure form for that corporation/partnership.)

THIS FORM MUST BE INCLUDED WITH BID SUBMISSION.

Subscribed and sworn
Before me this day

_____ _____
(Signature of Officer/Owner)

_____ _____
(Name and Title)

_____
Notary Public
My commission expires:

(CORPORATE SEAL)

NON-COLLUSION AFFIDAVIT

STATE OF NEW JERSEY
COUNTY OF _____

I, _____ residing in _____
(name of municipality)

in the County of _____ and State of _____of full age,

being duly sworn according to law on my oath dispose and say that:

I, am _____of the firm of _____,
(title or position) (name of firm)

the bidder making this Proposal for the bid proposal entitled _____
(title of bid proposal)
_____, and that I executed the said proposal with full authority to do so,

that said bidder has not, directly or indirectly entered into any agreement, participated in any collusion, or otherwise taken any action in restraint of free, competitive bidding in connection with the above named project; and that all statements contained in said proposal and in this affidavit are true and correct, and made with full knowledge that the **City of Long Branch** relies upon the truth of the statements contained in said Proposal, and in the statements contained in this affidavit, in awarding the contract for the said project.

I further warrant that no person or selling agency has been employed or retained to solicit or secure such contract upon an agreement or understanding for a commission, percentage, brokerage, or contingent fee, except bona fide employees or bona fide established commercial or selling agencies maintained by _____.
(name of firm)

_____
(signature of affiant)

Subscribed and sworn to
before me this day

_____

_____
(signature of notary)

My Commission expires:

EXHIBIT A
MANDATORY EQUAL EMPLOYMENT OPPORTUNITY LANGUAGE
N.J.S.A. 10:5-31 et seq. (P.L. 1975, C. 127)
N.J.A.C. 17:27
GOODS, PROFESSIONAL SERVICE AND GENERAL SERVICE CONTRACTS

During the performance of this contract, the contractor agrees as follows:

The contractor or subcontractor, where applicable, will not discriminate against any employee or applicant for employment because of age, race, creed, color, national origin, ancestry, marital status, affectional or sexual orientation, gender identity or expression, disability nationality or sex. Except with respect to affectional or sexual orientation and gender identity or expression, the contractor will take affirmative action to ensure that such applicants are recruited and employed, and that employees are treated during employment, without regard to their age, race, creed, color, national origin, ancestry, marital status, affectional or sexual orientation, gender identity or expression, disability, nationality or sex. Such action shall include, but not be limited to the following: employment, upgrading, demotion, or transfer; recruitment or recruitment advertising; layoff or termination; rates of pay or other forms of compensation; and selection for training, including apprenticeship. The contractor agrees to post in conspicuous places, available to employees and applicants for employment, notices to be provided by the Public Agency Compliance Officer setting forth provisions of this nondiscrimination clause.

The contractor or subcontractor, where applicable will, in all solicitations or advertisements for employees placed by or on behalf of the contractor, state that all qualified applicants will receive consideration for employment without regard to age, race, creed, color, national origin, ancestry, marital status, affectional or sexual orientation, gender identity or expression, disability, nationality or sex.

The contractor or subcontractor, where applicable, will send to each labor union or representative or workers with which it has a collective bargaining agreement or other contract or understanding, a notice, to be provided by the agency contracting officer advising the labor union or workers' representative of the contractor's commitments under this act and shall post copies of the notice in conspicuous places available to employees and applicants for employment.

The contractor or subcontractor, where applicable, agrees to comply with any regulations promulgated by the Treasurer pursuant to N.J.S.A. 10:5-31 et seq., as amended and supplemented from time to time and the Americans with Disabilities Act.

The contractor or subcontractor agrees to make good faith efforts to employ minority and women workers consistent with the applicable county employment goals established in accordance with N.J.A.C. 17:27-5.2, or a binding determination of the applicable county employment goals determined by the Division, pursuant to N.J.A.C. 17:27-5.2.

The contractor or subcontractor agrees to inform in writing its appropriate recruitment agencies including, but not limited to, employment agencies, placement bureaus, colleges, universities, labor unions, that it does not discriminate on the basis of age, creed, color, national origin, ancestry, marital status, affectional or sexual orientation, gender identity or expression, disability, nationality or sex, and that it will discontinue the use of any recruitment agency which engages in direct or indirect discriminatory practices.

The contractor or subcontractor agrees to revise any of its testing procedures, if necessary, to assure that all personnel testing conforms with the principles of job-related testing, as established by the statutes and court decisions of the State of New Jersey and as established by applicable Federal law and applicable federal court decisions.

In conforming with the applicable employment goals, the contractor or subcontractor agrees to review all procedures relating to transfer, upgrading, downgrading and layoff to ensure that all such actions are taken without regard to age, creed, color, national origin, ancestry, marital status, affectional or sexual orientation, gender identity or expression, disability, nationality or sex, consistent with the statutes and court decisions of the State of New Jersey, and applicable Federal law and applicable Federal court decisions.

The contractor shall submit to the public agency, after notification of award but prior to execution of a goods and services contract, one of the following three documents:

Letter of Federal Affirmative Action Plan Approval
Certificate of Employee Information Report
Employee Information Report Form AA302

The contractor and its subcontractors shall furnish such reports or other documents to the Div. of Contract Compliances & EEO as may be requested by the office from time to time in order to carry out the purposes of these regulations, and public agencies shall furnish such information as may be requested by the Div. of Contract Compliance & EEO for conducting a compliance investigation pursuant to **Subchapter 10 of the Administrative Code at N.J.A.C. 17:27.**

AMERICANS WITH DISABILITIES ACT OF 1990

Equal Opportunity for Individuals with Disability

The CONTRACTOR and the OWNER do hereby agree that the provisions of Title II of the American With Disabilities Act of 1990 (the "ACT") (42 U.S.C. S12101 et seq.), which prohibits discrimination on the basis of disability by public entities in all services, programs, and activities provided or made available by public entities, and the rules and regulations promulgated pursuant thereunto, are made a part of this contract. In providing any aid, benefit, or service on behalf of the OWNER pursuant to this contract, the CONTRACTOR agrees that the performance shall be in strict compliance with the Act. In the event that the Contractor, its agents, servants, employees, or subcontractors violate or are alleged to have violated the Act during the performance of this contract, the CONTRACTOR shall defend the OWNER in any action or administrative proceeding commenced pursuant to this Act. The Contractor shall indemnify, protect, and save harmless the OWNER, its agents, servants, and employees from and against any and all suits, claims, losses, demands, or damages, of whatever kind or nature arising out of or claimed to arise out of the alleged violation. The CONTRACTOR shall, at its own expense, appear, defend, and pay any and all charges for legal services and any and all costs and other expenses arising from such action or administrative proceeding or incurred in connection therewith. In any and all complaints brought pursuant to the OWNER grievance procedure, the CONTRACTOR agrees to abide by any decision of the OWNER which is rendered pursuant to said grievance procedure. If any action or administrative proceeding results in an award of damages against the OWNER or if the
OWNER incurs any expense to cure a violation of the ADA which has been brought pursuant to its grievance procedure, the CONTRACTOR shall satisfy and discharge the same at its own expense.

The OWNER shall, as soon as practicable after a claim has been made against it, give written notice thereof to the CONTRACTOR along with full and complete particulars of the claim. If any action or administrative proceedings is brought against the OWNER or any of its agents, servants, and employees, the OWNER shall expeditiously forward or have forwarded to the CONTRACTOR every demand, complaint, notice, summons, pleading, or other process received by the OWNER or its representatives.

It is expressly agreed and understood that any approval by the OWNER of the services provided by the CONTRACTOR pursuant to this contract will not relieve the CONTRACTOR of the obligation to comply with the Act and to defend, indemnify, protect, and save harmless the OWNER pursuant to this paragraph.

It is further agreed and understood that the OWNER assumes no obligation to indemnify or save harmless the CONTRACTOR, its agents, servants, employees and subcontractors for any claim which may arise out of their performance of this Agreement. Furthermore, the CONTRACTOR expressly understands and agrees that the provisions of this indemnification clause shall in no way limit the CONTRACTOR'S obligations assumed in this Agreement, nor shall they be construed to relieve the CONTRACTOR from any liability, nor preclude the OWNER from taking any other actions available to it under any other provisions of the Agreement or otherwise at law.

CONTRACT LANGUAGE FOR
BUSINESS REGISTRATION CERTIFICATE COMPLAINCE

For Procurement (Goods and Services) Contracts
(including Purchase Orders)

N.J.S.A. 52:32-44 imposes the following requirements on contractors and all subcontractors that **knowingly** provide goods or perform services for a contractor fulfilling this contract: 1) the contractor shall provide written notice to its subcontractors to submit proof of business registration to the contractor; 2) prior to receipt of final payment from the contracting agency, a contractor must submit to the contracting agency an accurate list of all subcontractors or attest that none was used; 3) during the term of this contract, the contractor and its affiliates shall collect and remit, and shall notify all subcontractors and their affiliates that they must collect and remit to the Director, New Jersey Division of Taxation, the use tax due pursuant to the Sales and Use Tax Act, (N.J.S.A. 54:32B-1 et seq.) on all sales of tangible personal property delivered into this State.

A contractor, subcontractor or supplier who fails to provide proof of business registration or provides false business registration information shall be liable to a penalty or $25 for each day of violation, not to exceed $50,000 for each business registration not properly provided or maintained under a contract with the contracting agency. Information of the law and its requirements is available by calling (609)292-9292.

For Construction Contracts

N.J.S.A. 52:32-44 imposes the following requirements on contractors and all subcontractors that **knowingly** provide goods or perform services for a contractor fulfilling this contract:

1) The contractor shall provide written notice to its subcontractors and suppliers to submit proof of business registration to the contractor;
2) Subcontractors through all tiers of a project must provide written notice to their subcontractors and suppliers to submit proof of business registration and subcontractors shall collect proofs of business registration and maintain them on file;
3) Prior to receipt of final payment from a contracting agency, a contractor must submit to the contracting agency an accurate list of all subcontractors and suppliers or attest that none was used; and,
4) During the term of this contract, the contractor and its affiliates shall collect and remit, and shall notify all subcontractors and their affiliates that they must collect and remit, to the Director, New Jersey Division of Taxation, the use tax due pursuant to the Sales and Use Tax Act, (N.J.S.A. 52:32B-1 et seq.) on all sales of tangible personal property delivered into this State.

A contractor, subcontractor or supplier who fails to provide proof of business registration or provides false business registration information shall be liable to a penalty or $25 for each day of violation, not to exceed $50,000 for each business registration not properly provided or maintained under a contract with the contracting agency. Information of the law and its requirements is available by calling (609)292-9292.

Long Branch, New Jersey
ORDINANCE NO. 18-05

AN ORDINANCE TO AMEND AND SUPPLEMENT ORDINANCE NO. 13-05, KNOWN AS "AN ORDINANCE REQUIRING PUBLIC CONTRATING REFORM, AND AMENDING AND SUPPLEMENTING THE 'REVISED GENERAL ORDINANCES OF THE CITY OF LONG BRANCH, NEW JERSEY' ACCORDINGLY," AS ADOPTED ON MAY 10, 2005.

WHEREAS, on May 10, 2005, the City of Long Branch adopted Ordinance No. 13-05, known as "An Ordinance Requiring Public Contracting Reform, and Amending and Supplementing the 'Revised General Ordinances of the City of Long Branch, New Jersey' Accordingly" (the "Ordinance"); and

WHEREAS, the Ordinance places certain limitations upon the annual amount(s) of contributions that professionals may make to the political campaigns of the local elected officials who are ultimately responsible for the award of discretionary no-bid contracts for municipal professional services; and

WHEREAS, the intention of the Ordinance is to ensure trust in the process of local government, if not the quality or cost of services received, and to minimize any perceptions or concerns on the part of the public that discretionary no-bid contracts for municipal professional services are being awarded to professionals as a reward for having made substantial political contributions, or that the award of such contracts was influenced, even to a minor degree, by the payment of such contributions; and

WHEREAS, it is hereby found and declared that the practice of "wheeling," whereby one political organization channels campaign donations to another political organization with the intention to conceal or misrepresent the source of the contribution, may be utilized as a loophole to circumvent the proscriptions contained within the Ordinance; and

WHEREAS, the City Council of the City of Long Branch, in a continuing effort to ensure the integrity of the award of public professional service contracts, has therefore determined that it would be in the best interests of the City, and its residents, to amend the Ordinance in an attempt to curb the practice known as "wheeling;" and

WHEREAS, the City Council of the City of Long Branch also wishes to take this opportunity to clarify the "arbitration" provision referenced in Section 3(c) thereof; and

WHEREAS, the City Council of the City of Long Branch finds that it is in the best interest of the City and its residents to require that a contribution of more

than fifty dollars ($50.00) received by a candidate be reported in the manner set forth by the laws and regulations of the State of New Jersey.

NOW, THEREFORE, BE AND IT IS HEREBY ORDAINED, that Ordinance No. 13-05, known as "An Ordinance Requiring Public Contracting Reform, and Amending and Supplementing the 'Revised General Ordinances of the City of Long Branch, New Jersey' Accordingly," which was adopted on May 10, 2005, is hereby amended and supplemented as follows:

SECTION 1

Prohibition on Awarding Professional Contracts to Certain Contributors

(a) The City of Long Branch shall not enter into an agreement for professional services with any individual and/or professional business entity if that individual or entity has solicited or made any contribution of money or pledge of a contribution including in-kind contributions, to a campaign of any City of Long Branch candidate for Council or Mayor, in excess of the threshold specified in subsection (d) of this Section within one calendar year immediately preceding the date of the contract or agreement unless cured pursuant to Section 3. The prohibition set forth in this Paragraph shall also apply to any solicitation or contribution of money or pledge of a contribution including in-kind contributions made during the applicable time period to any City of Long Branch or Monmouth County Party Committee, or to any political action committee (PAC) that is organized for the primary purpose of promoting or supporting City of Long Branch candidates for Council or Mayor, so long as the solicitation or contribution was made with the intention on the part of the contributor to conceal or misrepresent the source of the contribution.

(b) No professional business entity which enters into negotiations for, or agrees to, any contact or agreement with the municipality or any department or agency thereof or any of its independent authorities for the rendition of professional services shall knowingly solicit or make any contribution of money, or pledge of a contribution, including in-kind contributions, to any City of Long Branch candidate or holder of public office having ultimate responsibility for the award of the contract, in excess of the amount set forth herein. This Section is to include any and all professionals who provide political contributions to any candidate for an office whether or not that candidate is presently in office or seeks office. The prohibition set forth in this Paragraph shall also apply to any solicitation or contribution of money or pledge of a contribution including in-kind contributions to any City of Long Branch or Monmouth County Party Committee, or to any political action committee (PAC) that is organized for the primary purpose of promoting or supporting City of Long Branch candidates for Council or Mayor, so long as the solicitation or contribution was made with the intention on the part of the contributor to conceal or misrepresent the source of the contribution.

(c) For purpose of this ordinance, a "professional business entity" seeking a public contract means an individual including the individual's spouse, if

any, and any child living at home; person; firm; corporation, professional corporation; partnership; organization; or association. The definition of a business entity includes all principals who own ten percent (10%) or more of the equity in the corporation or business trust, partners, and officers in the aggregate employed by the entity as well as any subsidiaries directly controlled by the business entity.

(d) Any individual meeting the definition of "professional business entity" under this section may annually contribute a maximum of five hundred dollars ($500.00) per candidate for Mayor and/or Council Member on an annual basis whether or not that individual has a professional services contract in place or not to the maximum extent of three thousand dollars ($3,000) per annum per business entity. This section shall apply to any presently sitting Councilperson and/or the Mayor of the City of Long Branch and shall also apply to any individual who seeks to run for the office of Council person and/or Mayor of the City of Long Branch.

(i) Any individual that owns less than ten (10%) percent of a professional business entity which contracts with the City of Long Branch shall not be treated as a part of that entity.

(e) For purposes of this section, the office that is considered to have ultimate responsibility for the award of the contract shall be:

(1) The City of Long Branch, if the contract requires approval or appropriation from the Council.

(2) The Mayor of the City of Long Branch, if the contract requires approval of the Mayor, or if a public officer who is responsible for the award of a contract is appointed by the Mayor.

SECTION 2
Contributions Made Prior to Effective Date

No contribution of money or any other thing of value, including in-kind contributions, made by a professional business entity to any municipal candidate for Mayor or Council, or to any municipal or county party committee, or to any political action committee (PAC) that is organized for the primary purpose of promoting or supporting City of Long Branch candidates for Council or Mayor, shall be deemed a violation of this section, nor shall an agreement for property, good or services, of any kind whatsoever, be disqualified thereby, if that contribution was made by the professional business entity prior to the effective date of this section.

SECTION 3
Penalty

(a) All City of Long Branch professional service agreements shall provide that it shall be a breach of the terms of the government contract for a professional business entity as defined in Section 1(c) to violate Section 1(b) or to knowingly conceal or misrepresent contributions given or received, or to make or solicit contributions through intermediaries for the purpose of concealing or misrepresenting the source of the contribution.

(b) Any professional business entity as defined in Section 1(c) and (d) who knowingly fails to reveal a contribution made in violation of this Act, or who knowingly makes or solicits contributions through intermediaries for the purpose of concealing or misrepresenting the source of the contribution, shall be subjected to a fine in the sum of $2,500 so far as the first offense and for any second offense, shall be disqualified from eligibility for future City of Long Branch contracts for a period of four calendar years from the date of the violation.

(c) There shall be no breach of contract in the event a contribution is questioned and as a result of the questioning of the contribution the individual and/or business entity who makes the contribution requests that the contribution be returned by the campaign committee, the candidate or the political action committee to whom such contribution was made. In the event of any disputes as to whether or not a campaign contribution is proper the matter shall be submitted to arbitration before a retired Judge of the Superior Court of New Jersey.

SECTION 4
Reporting Requirements

Any contribution received by a candidate committee, joint candidates committee, or political committee, during an election fund report period of more than fifty dollars ($50.00) or aggregate contributions received by such a committee in an election from a contributor totaling more than fifty dollars ($50.00) during such a report period shall be reported by providing the information set forth in N.J.A.C. 19:25-10.2

SECTION 5
Severability

If any provision of this law, or the application of any such provision to any person or circumstances, shall be held invalid, the remainder of this law to the extent it can be given effect, or the application of such provision to persons or circumstances other than those to which it is held invalid, shall not be affected thereby, and to this extent the provisions of this law are severable.

SECTION 6
Effective Date

This Ordinance shall take effect immediately upon final passage and publication in accordance with the law.

SECTION 7
Repealer

All other Ordinance or parts of Ordinances inconsistent herewith are hereby repealed to the extent of such inconsistency.

Introduced: 6/14/05
Adopted: 6/28/05

GAGLIANO & COMPANY
Real Estate Advisory Services
1129 BROAD STREET, SUITE 101
SHREWSBURY, NJ 07702
732-380-0880 • 732-380-1521 FAX
www.gaglianoco.com

June 20, 2008

Purchasing Office
City of Long Branch
344 Broadway
Long Branch, NJ 07740

Re: 2008 – 2009 Proposal for Professional Real Estate Appraisal Services

Ladies and Gentlemen,

Thank you for considering Gagliano & Company for Real Estate Appraisal Services for the City of Long Branch. Gagliano & Company, founded in July 2001, is a full-service real estate appraisal and consulting firm located in Shrewsbury, New Jersey. I am the sole member of Gagliano Appraisal, LLC d/b/a Gagliano & Company.

Gagliano & Company provides real estate valuation services including commercial and residential real estate appraisals, expert testimony, appraisal review, market rent analysis, cost analysis, fairness opinions and cash flow projections.

We also provide a wide variety of real estate consulting services such as strategic counseling, market analysis, disposition and acquisition strategy, due diligence, litigation strategy and support, portfolio valuation, owner representation, tenant representation, public-private partnerships, feasibility studies, distressed asset workouts and adaptive reuse studies.

Through my employment at Robert A. Stanger & Co., Inc., I had the opportunity to develop real estate appraisal and consulting assignments in the United States and Canada for institutional investor clients, including U-Haul International, ShurGard Self Storage, Public Storage, Storage USA, MuniMae, W.P. Carey, Cabot Industrial Trust and others. More recently, Gagliano Appraisal was appointed by the Monmouth County Chancery Court as real estate consultant in the disposition of the $350+ million multi-state Dwek portfolio and engaged by the Army Corps of Engineers to appraise Fort Monmouth.

Purchasing Office
City of Long Branch

Presently, there are five certified appraisers, two commercial research assistants/analysts and one office administrator employed by Gagliano & Company. We have an extensive and detailed training program, and we stress in this training what we believe to be the four most critical elements of our profession: Ethics; Competence; Diligence and Delivery. Our training is rigorous and thorough and we believe it is the best in the business, as it allows us to provide comprehensive and efficient service to our clients. We require all trainees to take at least two Appraisal Institute classes per year towards the MAI designation. All licensed or certified appraisers must take at least 28 hours of continuing education per year – double the state requirement. Once the state appraisal continuing education requirements have been fulfilled, the appraisers are free to attend seminars or classes in a wide variety of topics, such as marketing/sales, computer/software skills, law, economics, management, interpersonal skills, public speaking, general real estate, tax assessment and other appraisal disciplines.

All appraisers and staff at Gagliano & Company are full-time salaried employees of the company and all work is completed at our offices. All work is reviewed twice: an appraisal is first peer-reviewed by a member of the staff and then a final review is completed by me.

We understand that the City of Long Branch may require residential, commercial and/or hotel appraisals, including water or oceanfront properties, New Jersey Department of Environmental Protection Green Acres real estate appraisals, expert witness testimony regarding property appraisals relative to the Monmouth County Board of Taxation Property Tax Appeals and/or New Jersey Tax Court, or in any other legal proceedings, and expert testimony regarding property appraisals relative to property condemnations in Monmouth County Superior Court, Condemnation Commission, or in any other legal proceedings. We have performed all of these services for public entities, including the City of Long Branch, on a number of occasions.

Projects for the City of Long Branch may be large or small, but without question they must be completed in a timely manner. Our commitment to our clients is paramount, and all staff is required to return telephone calls and respond to client communications within 24 hours. On longer projects, we arrange for monthly progress meetings or teleconferences. We pride ourselves on our high quality, diligently prepared and thoroughly readable appraisal reports and consulting assignments, and in the timely delivery of our work.

The primary appraisers that would be assigned to the City of Long Branch are Robert Gagliano, MAI, CTA, commercial appraisers Bruce E. Jones and James Meehan and residential appraiser Donna Sarkady. The qualifications of these appraisers are attached.

Purchasing Office
City of Long Branch

Our clients include and number of municipalities, Monmouth, Middlesex and Atlantic Counties and the New Jersey Department of Transportation. I have testified before the New Jersey Superior Court, the Monmouth County Chancery Court, the New Jersey State Tax Court, the Monmouth and Ocean County Tax Boards, a number of condemnation commissioners and planning and zoning boards on land use applications. We are presently under contract to a number of public entities for tax appeal defense, eminent domain and other real estate appraisal services, including:

- Monmouth County
- Middlesex County
- Atlantic County
- Atlantic Highlands Borough
- Colts Neck Township
- Belmar Borough
- Red Bank Borough
- Rumson Borough
- Long Branch City
- Ocean Township
- Lakewood Township
- Manchester Township
- Spring Lake Borough
- Tinton Falls Borough
- Colts Neck Township
- Freehold Borough
- Highland Park Borough
- Jamesburg Borough
- Holmdel Township

Following are several professional references:

Hon. Pasquale Menna, Esq.
Mayor of Red Bank
167 Avenue at the Commons
Shrewsbury, NJ 07701
732-578-9400

Mr. Frederick C. Raffetto, Esq.
Ansell, Zaro, Grimm & Aaron
1500 Lawrence Avenue, CN 7807
Ocean, NJ 07712
732-922-1000

Purchasing Office
City of Long Branch

Mr. Mitchell Elias, Tax Assessor
Monroe Township (Red Bank, Freehold Borough, Spring Lake Heights)
1 Municipal Plaza
Monroe Township, NJ 08831
732-521-4400

Ms. Linda Solakian, Tax Assessor
Lakewood Township
231 3rd Street
Lakewood, NJ 08701
732-364-2500 Ext. 5243

Mr. John P. Smith, Appraisal Reviewer
DEP/Green Acres
501 East State Street, 1st Floor
P.O. Box 412
Trenton, NJ 08625-0412
609-984-0538

More information about Gagliano & Company can be found on our web site: www.gaglianoco.com.

Work will generally be divided in to three (3) phases. Each phase will be completed only at the request of the client. Our proposed hourly fees are as follows:

Professional	Hourly Rate
Principal or MAI Appraiser	$160
Commercial Appraiser	$130
Residential Appraiser	$110

Phase I - Preliminary Analysis: Includes curbside exterior inspection, the development of all applicable approaches to value, and a brief, written preliminary analysis to be presented to the City Assessor and Attorney for case evaluation purposes.

Property Type: One to Four Family Dwellings; fee not to exceed $1,000 for any single property.

Property Type: Commercial/Industrial/Multifamily; fee not to exceed $2,500 for any single property.

Purchasing Office
City of Long Branch

Phase II - Appraisal Report for Trial: Includes full exterior and interior inspection and the development of Complete Summary Appraisal Reports in narrative format in support of testimony.

Property Type: One to Four Family Dwellings; fee not to exceed $500 for any single property, in addition to the fee for the preliminary analysis.

Property Type: Commercial/Industrial/Multifamily; fee not to exceed $1,500 for any single property, in addition to the fee for the preliminary analysis.

Phase III - Testimony/Settlement Conferences: As requested by the client, the Principal or an MAI appraiser will prepare for testimony, testify, participate in settlement teleconferences and attend meetings.

Property Type: One to Four Family Dwellings; fee not to exceed $2,000 for any single property, inclusive of all three phases of work.

Property Type: Commercial/Industrial/Multifamily; fee not to exceed $6,000 for any single property, inclusive of all three phases of work.

Thank you again, and please do not hesitate to call if you have any questions.

Sincerely,

Robert Gagliano, MAI, CTA
President

Enclosures

ROBERT GAGLIANO, MAI
Gagliano & Company

PROFESSIONAL QUALIFICATIONS

Appraisal Institute
Designated Member of the Appraisal Institute ("MAI") #11881, 2002
State of New Jersey
State Certified General Real Estate Appraiser #42RG00137100, 1995
Certified Tax Assessor #1941, 1994
Licensed Real Estate Salesperson, 1993
Approved Green Acres Appraiser
Approved Farmland Preservation Appraiser
Approved New Jersey Department of Transportation Appraiser

PROFESSIONAL EXPERIENCE

Gagliano & Company, *Real Estate Appraisal & Consulting*
CEO/Chairman, July 2001 – Present
Core Realty Group, *Real Estate Brokerage, Leasing & Management*
CEO/Chairman, April 2005 – Present
Robert A. Stanger & Co., Inc., *Real Estate Investment Banking*
Senior Vice President, July 1997 – June 2001
Guiney Guenther Group, Inc., *Real Estate Brokers*
Salesperson, September 1996 – April 2005
Johnson Realty Services, Paul R. Johnson, MAI, *Commercial Real Estate Appraisal*
Associate Appraiser, January 1993 - August 1996
Garden State Realty Appraisal, Eugene Briggs, SRA, *Residential Real Estate Appraisal*
Associate Appraiser, October 1992 - February 1993
Borough of Tinton Falls
Member, Borough Council, May 1991 – September 1998
Member, Planning Board, July 1991 - July 1992
Member, Zoning Board of Adjustment, 1990 - 1991
Borough of Spring Lake
Interim Tax Assessor, May 2005 – August 2005
Borough of Rumson
Tax Assessor, January 1995 – February 1998
Borough of Atlantic Highlands
Tax Assessor, July 1995 - February 1998
Borough of Oceanport
Tax Assessor, April 1997 - February 1998
Borough of Interlaken
Tax Assessor, April 1997 - February 1998

ROBERT GAGLIANO, MAI
Gagliano & Company

EDUCATION

Appraisal Institute
All Continuing Education Requirements Complete
Business Practices and Ethics – Seminar December 2007
Uniform Standards of Professional Appraisal Practice Update – Seminar October 2007
Uniform Appraisal Standards for Federal Land Acquisitions – Seminar October 2006
Scope of Work – Seminar March 2005
Feasibility Analysis, Market Value and Investment Timing - Seminar October 2002
Advanced Applications, October 2000
Demonstration Appraisal Report Writing - Seminar, August 2000
Report Writing and Valuation Analysis, August 2000
Advanced Sales Comparison and Cost Approaches, April 2000
Highest & Best Use and Market Analysis, October 1999
Advanced Income Capitalization, May 1999
Appraisal Reporting of Complex Residential Properties - Seminar, October 1995
Appraisal Practices for Litigation - Seminar, November 1995
General Applications, December 1994
Basic Income Capitalization, October 1993
Appraisal Procedures, May 1993

Ted Whitmer, MAI, CRE, Attorney
Attacking & Defending an Appraisal in Litigation, Part II, December 2003
Attacking & Defending an Appraisal in Litigation, Part I, September 2001
Comprehensive Appraisal Workshop, February 2001

Monmouth University Real Estate Institute
Regulation and the Real Estate Development Process, March 1997

Rutgers Center for Government Services
Property Tax Administration I, May 1994

Briggs Real Estate Appraisal School
Writing the Small Residential Income Property Appraisal Report, January 1993
Writing the Single Family Residential Appraisal Report, October 1992

Ocean School of Real Estate
Residential Real Estate Appraisal, August 1992

Vanderbilt University
Bachelor of Arts, English/Writing, May 1984

ROBERT GAGLIANO, MAI
Gagliano & Company

PARTIAL LIST OF CLIENTS

Government	
U.S. Army Corps of Engineers	Aberdeen Township
U.S. General Services Administration	Spring Lake Heights Borough
State of New Jersey DEP (Green Acres)	Upper Freehold Township
State of New Jersey Department of Transportation	Lakewood Township
New Jersey Turnpike Authority	Lakewood Board of Education
Monmouth County	Asbury Park Housing Authority
Middlesex County	Spring Lake Borough
Long Branch City	Keansburg Borough
Atlantic Highlands Borough	Mansfield Township (Warren County)
Atlantic Highlands Harbor Commission	Neptune Township
Shrewsbury Borough	Eatontown Borough Board of Education
Red Bank Borough	Tinton Falls Borough
Belmar Borough	Colts Neck Township
Rumson Borough	Freehold Borough
Sea Bright Borough	Highland Park Borough
Fair Haven Borough	Matawan Borough
Ocean Township	Manchester Township
South Amboy City	West Long Branch Borough
Jamesburg Borough	Monroe Township
Lyndhurst Township	Monmouth Beach Borough
Holmdel Township	Howell Township
Lawyers and Law Firms	
Giordano, Halleran & Ciesla	McKenna, DuPont, Higgins & Stone
Ansell, Zaro, Grimm & Aaron	Wilentz, Goldman & Spitzer
Cleary, Alfieri, Jones & Hoyle	Stout & O'Hagan
Bowe & Fernicola	Maggs & McDermott
Bennett & Yoskin	Cole, Schotz, Meisel, Forman & Leonard
Wasserman, Jurista & Stolz	Hanlon & Niemann
Orloff, Lowenbach, Stifelman & Siegel	Lomurro, Davison Eastman & Munoz
Starkey, Kelly, Bauer & Kenneally	Carchman, Socohor, Schwartz, Ragsdale & Cohen
GluckWalrath	Parsons and Nardelli
Collins, Vella & Casello	Widman, Cooney & Wilson
Archer & Greiner	Sills Cummis Epstein & Gross
Greenbaum, Rowe, Smith & Davis	Chamlin, Rosen, Uliano & Witherington
Banks and Lenders	
Wachovia Bank	Lakeland Bank
Sovereign Bank	Rumson-Fair Haven Bank & Trust
Two River Community Bank	TBI Mortgage
Valley National Bank	American Home Bank
Central Jersey Bank	First Federal of Charleston
Commerce Bank	Silver Hill Financial
Independence Community Bank	Mercury Capital
Lehman Brothers Bank	National City Mortgage
Yardville National Bank	Kastle Mortgage
Provident Bank	
Corporate and Institutional	
U-Haul International, Inc.	D&R Greenway Land Trust
K. Hovnanian	Pine Belt Auto Group
Advance Realty Group	RoMiCo, Ltd.
Suburban Propane	Meridian Health Realty Corp.
The Trust for Public Land	Monmouth Conservation Foundation
Lennar/U.S. Home	CentraState Medical Center

BRUCE E. JONES
Gagliano & Company

PROFESSIONAL QUALIFICATIONS

State of New Jersey
State Certified General Real Estate Appraiser #42RG00211100
Licensed New Jersey Real Estate Broker

PROFESSIONAL EXPERIENCE

Gagliano & Company, *Real Estate Advisory Services*
Executive Vice President, Senior Appraiser, 2004 – Present
Core Realty Group, *Real Estate Brokerage, Leasing & Management*
President, April 2005 - Present
Wentworth Group, *Real Estate Services*
Vice President/Broker of Record, 1994 – 2004
Balsley Losco Real Estate
Real Estate Salesperson, 1990 – 1994
H-U-S Real Estate
Real Estate Salesperson, 1986 – 1990

EDUCATION

Appraisal Institute
Advanced Income Capitalization, 2006
Advanced Applications, 2006
Report Writing and Valuation Analysis, 2005
Advanced Sales Comparison and Cost Approaches, 2005
Highest and Best Use and Market Analysis, 2004
Basic Income Capitalization, 2004
Evaluating Commercial Construction, 2006
Rules of Thumb for Appraisers, 2007
Fundamentals of Real Estate Appraisal I & II, 2003
Uniform Standards of Professional Appraisal Practice, 2003

Monmouth University Real Estate Institute
Appraisal of Income Properties, 1997
Real Estate Law, 1998

Marshall & Swift Certified Appraiser (MSCA)
Cost Approach to Commercial Appraising, December 2004

Richard Stockton College
Bachelor of Arts - Finance, 1986

JAMES MEEHAN
Gagliano & Company

PROFESSIONAL QUALIFICATIONS

State of New Jersey
State Certified General Appraiser #42RP00213000, 2007

PROFESSIONAL EXPERIENCE

Gagliano & Company, *Real Estate Advisory Services*
Senior Commercial Appraiser, September 2006 – Present
DePetro Appraisals
Associate Residential Appraiser, November 2005 – August 2006
Gizzi Appraisals, *Capital Markets Division*
Associate Residential Appraiser, May 2004 – June 2005

EDUCATION

Monmouth University
MBA, Real Estate January 2008 - Present

Appraisal Institute
Advanced Sales Comparison and Cost Approach, October 2007
USPAP Update – Seminar, April 2007
Market Analysis and Highest and Best Use, March 2007
Advanced Income Capitalization, December 2006
Basic Income Capitalization, September 2006
Residential Report Writing, August 2006
Residential Highest and Best Use, June 2006

North Jersey School of Real Estate
Real Estate Appraisal Principles and Procedures, January 2004

University of South Carolina
Bachelor of Science - Finance, August 2001

DONNA SARKADY
Gagliano & Company

PROFESSIONAL QUALIFICATIONS

State of New Jersey
State Certified Real Estate Appraiser #42RC00158100
Licensed Real Estate Salesperson

PROFESSIONAL EXPERIENCE

Gagliano & Company, *Real Estate Advisory Services*
Senior Vice President, April 2004 – Present
Core Realty Group, *Real Estate Brokerage, Leasing & Management*
Salesperson, July 2005 – Present
Independent Fee Appraiser 1999 – Present
Central State Appraisal Services, *Real Estate Appraisal Services*
Martin Associates, *Real Estate Appraisal Services*
Filip Valuation Services LLC, *Real Estate Appraisal Services*
JM Associates, *Real Estate Appraisal Services*
Architectural Appraisals, *Real Estate Appraisal Services*
DH Gerow, *Real Estate Appraisal Services*
Murphy Realty Preferred Homes, *Real Estate Brokers*

EDUCATION

National Association of Independent Fee Appraisers (NAIFA)
Professional Standards of Practice, April 2007
Professional Standards of Practice, April 2004
Professional Standards of Practice, November 2002
The Internet and the Appraisal Practice, January 2000
Home Inspections: Common Defects in Home, November 1999
Professional Standards of Practice, November 1998
Principles of Residential Real Estate Appraising, August 1998

NAIFA Joint Appraisal Conference April 2000-2007

Appraisal Institute
Advanced Residential Form & Narrative Report Writing, September 2005

United Business School
FannieMae 2005 Revised and New Report Forms, November 2005
Appraising a Condominium, PUD or Cooperative, July 2001
How to Use the Uniform Residential Appraisal Report, November 1998
American School of Business
Appraising Residential Income Properties (2-4 family homes), February 2002

DONNA SARKADY
Gagliano & Company

McKissock
Appraising FHA Today, December 2007
Appraising Historic Properties, December 2007

Weichert Real Estate School
Salespersons Course, 2001

Brookdale Community College
Associates of Arts, 1996

STOCKHOLDER DISCLOSURE CERTIFICATION

If bidder is a sole proprietorship, check here _____
And do not complete this statement.

The UNDERSIGNED, as bidder, in accordance with P.L. 1977, Chapter 33, of the State of New Jersey, declares and submits this Statement of Ownership.

Bidder is a Corporation (✓) Partnership ( )

✓ I certify that the list below contains the names and home addresses of all stockholders holding 10% or more of the issued and outstanding stock of the undersigned. (Use additional sheets in this format if necessary.)

____ I certify that no one stockholder owns 10% or more of the issued and outstanding stock of the undersigned.

Stockholder/Partner

Name Robert Gagliano
Home Address 287 Rumson Road
Little Silver, NJ. 07739

Name _____
Home Address _____

Name _____
Home Address _____

Name _____
Home Address _____

Name _____
Home Address _____

Name _____
Home Address _____

Name _____
Home Address _____

(If a corporation or partnership is shown as an owner of 10% or more stock, you must attach a Stockholder Disclosure form for that corporation/partnership.)

THIS FORM MUST BE INCLUDED WITH BID SUBMISSION.

Subscribed and sworn
Before me this day 20
June 2008

Sophia Taylor
Notary Public
My commission expires:

SOPHIA TAYLOR
NOTARY PUBLIC
STATE OF NEW JERSEY
MY COMMISSION EXPIRES 10-01-2012

_____
(Signature of Officer/Owner)

Robert Gagliano, President
(Name and Title)

(CORPORATE SEAL)

NON-COLLUSION AFFIDAVIT

STATE OF NEW JERSEY
COUNTY OF Monmouth

I, Robert Gagliano residing in Little Silver
(name of municipality)

in the County of Monmouth and State of New Jersey of full age,

being duly sworn according to law on my oath dispose and say that:

I, am President of the firm of Gagliano Appraisal, LLC
(title or position) (name of firm)

the bidder making this Proposal for the bid proposal entitled Proposal for Real Estate Appraisal Services (title of bid proposal), and that I executed the said proposal with full authority to do so, that said bidder has not, directly or indirectly entered into any agreement, participated in any collusion, or otherwise taken any action in restraint of free, competitive bidding in connection with the above named project; and that all statements contained in said proposal and in this affidavit are true and correct, and made with full knowledge that the **City of Long Branch** relies upon the truth of the statements contained in said Proposal, and in the statements contained in this affidavit, in awarding the contract for the said project.

I further warrant that no person or selling agency has been employed or retained to solicit or secure such contract upon an agreement or understanding for a commission, percentage, brokerage, or contingent fee, except bona fide employees or bona fide established commercial or selling agencies maintained by Gagliano Appraisal, LLC
(name of firm)

(signature of affiant)

Subscribed and sworn to
before me this day 20
June 2008

(signature of notary)

My Commission expires:

SOPHIA TAYLOR
NOTARY PUBLIC
STATE OF NEW JERSEY
MY COMMISSION EXPIRES 10-01-2012

STATE OF NEW JERSEY

BUSINESS REGISTRATION CERTIFICATE

DEPARTMENT OF TREASURY/
DIVISION OF REVENUE
PO BOX 252
TRENTON, N J 08646-0252

TAXPAYER NAME:
GAGLIANO APPRAISAL, LLC

TRADE NAME:

TAXPAYER IDENTIFICATION#:
141-875-229/000

SEQUENCE NUMBER:
1058257

ADDRESS:
1129 BROAD STREET
SHREWSBURY NJ 07702-4316

ISSUANCE DATE:
08/24/04

EFFECTIVE DATE:
12/20/02

Acting Director

FORM-BRC(08-01)

This Certificate is NOT assignable or transferable. It must be conspicuously displayed at above address

Certification 32779

CERTIFICATE OF EMPLOYEE INFORMATION REPORT

INITIAL

This is to certify that the contractor listed below has submitted an Employee Information Report pursuant to N.J.A.C. 17:27-1.1 et seq. and the State Treasurer has approved said report. This approval will remain in effect for the period of

15-AUG-2002 to 15-AUG-2009

GAGLIANO APPRAISAL, LLC
1129 BROAD STREET
SHREWSBURY NJ 07702

State Treasurer

REQUIRED EVIDENCE
AFFIRMATIVE ACTION REGULATION
P.L. 1975, C. 127 (N.J.A.C. 17:27)

If awarded a contract, all procurement and service contractors will be required to comply with the requirements of P.L. 1975, c. 127, (N.J.A.C. 17:27). Within seven (7) days after receipt of the notification of intent to award the contract or receipt of the contract, whichever is sooner, the contractor should present one of the following to the Purchasing Agent.

1. **A photocopy of a valid letter from the U.S. Department of Labor that the contractor has an existing federally-approved or sanctioned Affirmative Action Plan (good for one year from the date of the letter).**

   OR

2. **A photocopy of approved Certificate of Employee Information Report from the State of New Jersey.**

   OR

3. **An Affirmative Action Employee Information Report (Form AA302).**

   OR

4. **All successful construction contractors must submit, within three days (3) of the signing of the contract, an Initial Project Manning Report (AA201) for any contract award that meets or exceeds the Public Agency bidding threshold (available upon request).**

NO FIRM MAY BE ISSUED A CONTRACT UNLESS IT COMPLIES WITH THE AFFIRMATIVE ACTION REGULATIONS OF P.L. 1975, C. 127.

The following questions must be answered by all bidders:

1. Do you have a federally-approved or sanctioned Affirmative Action Program?

___Yes _✓_No If yes, please submit copy of such approval.

2. Do you have a Certificate of Employee Information Report Approval?

_✓_Yes ___No If yes, please submit copy of such certificate.

The undersigned contractor certifies that he is aware of the commitment to comply with the requirements of P.L. 1975, c. 127, and agrees to furnish the required documentation pursuant to law.

COMPANY: Gagliano Appraisal, LLC

SIGNATURE: _____

TITLE: President

NOTE: A CONTRACTOR'S BID MUST BE REJECTED AS NON-RESPONSIVE IF A CONTRACTOR FAILS TO COMPLY WITH REQUIREMENTS OF P.L.1975, C. 127, WITHIN THE REQUIRED TIME FRAME.

EXHIBIT A
MANDATORY EQUAL EMPLOYMENT OPPORTUNITY LANGUAGE
N.J.S.A. 10:5-31 et seq. (P.L. 1975, C. 127)
N.J.A.C. 17:27
GOODS, PROFESSIONAL SERVICE AND GENERAL SERVICE CONTRACTS

During the performance of this contract, the contractor agrees as follows:

The contractor or subcontractor, where applicable, will not discriminate against any employee or applicant for employment because of age, race, creed, color, national origin, ancestry, marital status, affectional or sexual orientation, gender identity or expression, disability nationality or sex. Except with respect to affectional or sexual orientation and gender identity or expression, the contractor will take affirmative action to ensure that such applicants are recruited and employed, and that employees are treated during employment, without regard to their age, race, creed, color, national origin, ancestry, marital status, affectional or sexual orientation, gender identity or expression, disability, nationality or sex. Such action shall include, but not be limited to the following: employment, upgrading, demotion, or transfer; recruitment or recruitment advertising; layoff or termination; rates of pay or other forms of compensation; and selection for training, including apprenticeship. The contractor agrees to post in conspicuous places, available to employees and applicants for employment, notices to be provided by the Public Agency Compliance Officer setting forth provisions of this nondiscrimination clause.

The contractor or subcontractor, where applicable will, in all solicitations or advertisements for employees placed by or on behalf of the contractor, state that all qualified applicants will receive consideration for employment without regard to age, race, creed, color, national origin, ancestry, marital status, affectional or sexual orientation, gender identity or expression, disability, nationality or sex.

The contractor or subcontractor, where applicable, will send to each labor union or representative or workers with which it has a collective bargaining agreement or other contract or understanding, a notice, to be provided by the agency contracting officer advising the labor union or workers' representative of the contractor's commitments under this act and shall post copies of the notice in conspicuous places available to employees and applicants for employment.

The contractor or subcontractor, where applicable, agrees to comply with any regulations promulgated by the Treasurer pursuant to N.J.S.A. 10:5-31 et seq., as amended and supplemented from time to time and the Americans with Disabilities Act.

The contractor or subcontractor agrees to make good faith efforts to employ minority and women workers consistent with the applicable county employment goals established in accordance with N.J.A.C. 17:27-5.2, or a binding determination of the applicable county employment goals determined by the Division, pursuant to N.J.A.C. 17:27-5.2.

The contractor or subcontractor agrees to inform in writing its appropriate recruitment agencies including, but not limited to, employment agencies, placement bureaus, colleges, universities, labor unions, that it does not discriminate on the basis of age, creed, color, national origin, ancestry, marital status, affectional or sexual orientation, gender identity or expression, disability, nationality or sex, and that it will discontinue the use of any recruitment agency which engages in direct or indirect discriminatory practices.

The contractor or subcontractor agrees to revise any of its testing procedures, if necessary, to assure that all personnel testing conforms with the principles of job-related testing, as established by the statutes and court decisions of the State of New Jersey and as established by applicable Federal law and applicable federal court decisions.

In conforming with the applicable employment goals, the contractor or subcontractor agrees to review all procedures relating to transfer, upgrading, downgrading and layoff to ensure that all such actions are taken without regard to age, creed, color, national origin, ancestry, marital status, affectional or sexual orientation, gender identity or expression, disability, nationality or sex, consistent with the statutes and court decisions of the State of New Jersey, and applicable Federal law and applicable Federal court decisions.

The contractor shall submit to the public agency, after notification of award but prior to execution of a goods and services contract, one of the following three documents:

Letter of Federal Affirmative Action Plan Approval
Certificate of Employee Information Report
Employee Information Report Form AA302

The contractor and its subcontractors shall furnish such reports or other documents to the Div. of Contract Compliances & EEO as may be requested by the office from time to time in order to carry out the purposes of these regulations, and public agencies shall furnish such information as may be requested by the Div. of Contract Compliance & EEO for conducting a compliance investigation pursuant to **Subchapter 10 of the Administrative Code at N.J.A.C. 17:27.**

AMERICANS WITH DISABILITIES ACT OF 1990

Equal Opportunity for Individuals with Disability

The CONTRACTOR and the OWNER do hereby agree that the provisions of Title II of the American With Disabilities Act of 1990 (the "ACT") (42 U.S.C. S12101 et seq.), which prohibits discrimination on the basis of disability by public entities in all services, programs, and activities provided or made available by public entities, and the rules and regulations promulgated pursuant thereunto, are made a part of this contract. In providing any aid, benefit, or service on behalf of the OWNER pursuant to this contract, the CONTRACTOR agrees that the performance shall be in strict compliance with the Act. In the event that the Contractor, its agents, servants, employees, or subcontractors violate or are alleged to have violated the Act during the performance of this contract, the CONTRACTOR shall defend the OWNER in any action or administrative proceeding commenced pursuant to this Act. The Contractor shall indemnify, protect, and save harmless the OWNER, its agents, servants, and employees from and against any and all suits, claims, losses, demands, or damages, of whatever kind or nature arising out of or claimed to arise out of the alleged violation. The CONTRACTOR shall, at its own expense, appear, defend, and pay any and all charges for legal services and any and all costs and other expenses arising from such action or administrative proceeding or incurred in connection therewith. In any and all complaints brought pursuant to the OWNER grievance procedure, the CONTRACTOR agrees to abide by any decision of the OWNER which is rendered pursuant to said grievance procedure. If any action or administrative proceeding results in an award of damages against the OWNER or if the
OWNER incurs any expense to cure a violation of the ADA which has been brought pursuant to its grievance procedure, the CONTRACTOR shall satisfy and discharge the same at its own expense.

The OWNER shall, as soon as practicable after a claim has been made against it, give written notice thereof to the CONTRACTOR along with full and complete particulars of the claim. If any action or administrative proceedings is brought against the OWNER or any of its agents, servants, and employees, the OWNER shall expeditiously forward or have forwarded to the CONTRACTOR every demand, complaint, notice, summons, pleading, or other process received by the OWNER or its representatives.

It is expressly agreed and understood that any approval by the OWNER of the services provided by the CONTRACTOR pursuant to this contract will not relieve the CONTRACTOR of the obligation to comply with the Act and to defend, indemnify, protect, and save harmless the OWNER pursuant to this paragraph.

It is further agreed and understood that the OWNER assumes no obligation to indemnify or save harmless the CONTRACTOR, its agents, servants, employees and subcontractors for any claim which may arise out of their performance of this Agreement. Furthermore, the CONTRACTOR expressly understands and agrees that the provisions of this indemnification clause shall in no way limit the CONTRACTOR'S obligations assumed in this Agreement, nor shall they be construed to relieve the CONTRACTOR from any liability, nor preclude the OWNER from taking any other actions available to it under any other provisions of the Agreement or otherwise at law.

CONTRACT LANGUAGE FOR
BUSINESS REGISTRATION CERTIFICATE COMPLAINCE

For Procurement (Goods and Services) Contracts
(including Purchase Orders)

N.J.S.A. 52:32-44 imposes the following requirements on contractors and all subcontractors that **knowingly** provide goods or perform services for a contractor fulfilling this contract: 1) the contractor shall provide written notice to its subcontractors to submit proof of business registration to the contractor; 2) prior to receipt of final payment from the contracting agency, a contractor must submit to the contracting agency an accurate list of all subcontractors or attest that none was used; 3) during the term of this contract, the contractor and its affiliates shall collect and remit, and shall notify all subcontractors and their affiliates that they must collect and remit to the Director, New Jersey Division of Taxation, the use tax due pursuant to the Sales and Use Tax Act, (N.J.S.A. 54:32B-1 et seq.) on all sales of tangible personal property delivered into this State.

A contractor, subcontractor or supplier who fails to provide proof of business registration or provides false business registration information shall be liable to a penalty or $25 for each day of violation, not to exceed $50,000 for each business registration not properly provided or maintained under a contract with the contracting agency. Information of the law and its requirements is available by calling (609)292-9292.

For Construction Contracts

N.J.S.A. 52:32-44 imposes the following requirements on contractors and all subcontractors that **knowingly** provide goods or perform services for a contractor fulfilling this contract:

1) The contractor shall provide written notice to its subcontractors and suppliers to submit proof of business registration to the contractor;
2) Subcontractors through all tiers of a project must provide written notice to their subcontractors and suppliers to submit proof of business registration and subcontractors shall collect proofs of business registration and maintain them on file;
3) Prior to receipt of final payment from a contracting agency, a contractor must submit to the contracting agency an accurate list of all subcontractors and suppliers or attest that none was used; and,
4) During the term of this contract, the contractor and its affiliates shall collect and remit, and shall notify all subcontractors and their affiliates that they must collect and remit, to the Director, New Jersey Division of Taxation, the use tax due pursuant to the Sales and Use Tax Act, (N.J.S.A. 52:32B-1 et seq.) on all sales of tangible personal property delivered into this State.

A contractor, subcontractor or supplier who fails to provide proof of business registration or provides false business registration information shall be liable to a penalty or $25 for each day of violation, not to exceed $50,000 for each business registration not properly provided or maintained under a contract with the contracting agency. Information of the law and its requirements is available by calling (609)292-9292.

Long Branch, New Jersey
ORDINANCE NO. 18-05

AN ORDINANCE TO AMEND AND SUPPLEMENT ORDINANCE NO. 13-05, KNOWN AS "AN ORDINANCE REQUIRING PUBLIC CONTRATING REFORM, AND AMENDING AND SUPPLEMENTING THE 'REVISED GENERAL ORDINANCES OF THE CITY OF LONG BRANCH, NEW JERSEY' ACCORDINGLY," AS ADOPTED ON MAY 10, 2005.

WHEREAS, on May 10, 2005, the City of Long Branch adopted Ordinance No. 13-05, known as "An Ordinance Requiring Public Contracting Reform, and Amending and Supplementing the 'Revised General Ordinances of the City of Long Branch, New Jersey' Accordingly" (the "Ordinance"); and

WHEREAS, the Ordinance places certain limitations upon the annual amount(s) of contributions that professionals may make to the political campaigns of the local elected officials who are ultimately responsible for the award of discretionary no-bid contracts for municipal professional services; and

WHEREAS, the intention of the Ordinance is to ensure trust in the process of local government, if not the quality or cost of services received, and to minimize any perceptions or concerns on the part of the public that discretionary no-bid contracts for municipal professional services are being awarded to professionals as a reward for having made substantial political contributions, or that the award of such contracts was influenced, even to a minor degree, by the payment of such contributions; and

WHEREAS, it is hereby found and declared that the practice of "wheeling," whereby one political organization channels campaign donations to another political organization with the intention to conceal or misrepresent the source of the contribution, may be utilized as a loophole to circumvent the proscriptions contained within the Ordinance; and

WHEREAS, the City Council of the City of Long Branch, in a continuing effort to ensure the integrity of the award of public professional service contracts, has therefore determined that it would be in the best interests of the City, and its residents, to amend the Ordinance in an attempt to curb the practice known as "wheeling;" and

WHEREAS, the City Council of the City of Long Branch also wishes to take this opportunity to clarify the "arbitration" provision referenced in Section 3(c) thereof; and

WHEREAS, the City Council of the City of Long Branch finds that it is in the best interest of the City and its residents to require that a contribution of more

than fifty dollars ($50.00) received by a candidate be reported in the manner set forth by the laws and regulations of the State of New Jersey.

NOW, THEREFORE, BE AND IT IS HEREBY ORDAINED, that Ordinance No. 13-05, known as "An Ordinance Requiring Public Contracting Reform, and Amending and Supplementing the 'Revised General Ordinances of the City of Long Branch, New Jersey' Accordingly," which was adopted on May 10, 2005, is hereby amended and supplemented as follows:

SECTION 1

Prohibition on Awarding Professional Contracts to Certain Contributors

(a) The City of Long Branch shall not enter into an agreement for professional services with any individual and/or professional business entity if that individual or entity has solicited or made any contribution of money or pledge of a contribution including in-kind contributions, to a campaign of any City of Long Branch candidate for Council or Mayor, in excess of the threshold specified in subsection (d) of this Section within one calendar year immediately preceding the date of the contract or agreement unless cured pursuant to Section 3. The prohibition set forth in this Paragraph shall also apply to any solicitation or contribution of money or pledge of a contribution including in-kind contributions made during the applicable time period to any City of Long Branch or Monmouth County Party Committee, or to any political action committee (PAC) that is organized for the primary purpose of promoting or supporting City of Long Branch candidates for Council or Mayor, so long as the solicitation or contribution was made with the intention on the part of the contributor to conceal or misrepresent the source of the contribution.

(b) No professional business entity which enters into negotiations for, or agrees to, any contact or agreement with the municipality or any department or agency thereof or any of its independent authorities for the rendition of professional services shall knowingly solicit or make any contribution of money, or pledge of a contribution, including in-kind contributions, to any City of Long Branch candidate or holder of public office having ultimate responsibility for the award of the contract, in excess of the amount set forth herein. This Section is to include any and all professionals who provide political contributions to any candidate for an office whether or not that candidate is presently in office or seeks office. The prohibition set forth in this Paragraph shall also apply to any solicitation or contribution of money or pledge of a contribution including in-kind contributions to any City of Long Branch or Monmouth County Party Committee, or to any political action committee (PAC) that is organized for the primary purpose of promoting or supporting City of Long Branch candidates for Council or Mayor, so long as the solicitation or contribution was made with the intention on the part of the contributor to conceal or misrepresent the source of the contribution.

(c) For purpose of this ordinance, a "professional business entity" seeking a public contract means an individual including the individual's spouse, if

any, and any child living at home; person; firm; corporation, professional corporation; partnership; organization; or association. The definition of a business entity includes all principals who own ten percent (10%) or more of the equity in the corporation or business trust, partners, and officers in the aggregate employed by the entity as well as any subsidiaries directly controlled by the business entity.

(d) Any individual meeting the definition of "professional business entity" under this section may annually contribute a maximum of five hundred dollars ($500.00) per candidate for Mayor and/or Council Member on an annual basis whether or not that individual has a professional services contract in place or not to the maximum extent of three thousand dollars ($3,000) per annum per business entity. This section shall apply to any presently sitting Councilperson and/or the Mayor of the City of Long Branch and shall also apply to any individual who seeks to run for the office of Council person and/or Mayor of the City of Long Branch.

(i) Any individual that owns less than ten (10%) percent of a professional business entity which contracts with the City of Long Branch shall not be treated as a part of that entity.

(e) For purposes of this section, the office that is considered to have ultimate responsibility for the award of the contract shall be:

(1) The City of Long Branch, if the contract requires approval or appropriation from the Council.

(2) The Mayor of the City of Long Branch, if the contract requires approval of the Mayor, or if a public officer who is responsible for the award of a contract is appointed by the Mayor.

SECTION 2

Contributions Made Prior to Effective Date

No contribution of money or any other thing of value, including in-kind contributions, made by a professional business entity to any municipal candidate for Mayor or Council, or to any municipal or county party committee, or to any political action committee (PAC) that is organized for the primary purpose of promoting or supporting City of Long Branch candidates for Council or Mayor, shall be deemed a violation of this section, nor shall an agreement for property, good or services, of any kind whatsoever, be disqualified thereby, if that contribution was made by the professional business entity prior to the effective date of this section.

SECTION 3

Penalty

(a) All City of Long Branch professional service agreements shall provide that it shall be a breach of the terms of the government contract for a professional business entity as defined in Section 1(c) to violate Section 1(b) or to knowingly conceal or misrepresent contributions given or received, or to make or solicit contributions through intermediaries for the purpose of concealing or misrepresenting the source of the contribution.

(b) Any professional business entity as defined in Section 1(c) and (d) who knowingly fails to reveal a contribution made in violation of this Act, or who knowingly makes or solicits contributions through intermediaries for the purpose of concealing or misrepresenting the source of the contribution, shall be subjected to a fine in the sum of $2,500 so far as the first offense and for any second offense, shall be disqualified from eligibility for future City of Long Branch contracts for a period of four calendar years from the date of the violation.

(c) There shall be no breach of contract in the event a contribution is questioned and as a result of the questioning of the contribution the individual and/or business entity who makes the contribution requests that the contribution be returned by the campaign committee, the candidate or the political action committee to whom such contribution was made. In the event of any disputes as to whether or not a campaign contribution is proper the matter shall be submitted to arbitration before a retired Judge of the Superior Court of New Jersey.

SECTION 4
Reporting Requirements

Any contribution received by a candidate committee, joint candidates committee, or political committee, during an election fund report period of more than fifty dollars ($50.00) or aggregate contributions received by such a committee in an election from a contributor totaling more than fifty dollars ($50.00) during such a report period shall be reported by providing the information set forth in N.J.A.C. 19:25-10.2

SECTION 5
Severability

If any provision of this law, or the application of any such provision to any person or circumstances, shall be held invalid, the remainder of this law to the extent it can be given effect, or the application of such provision to persons or circumstances other than those to which it is held invalid, shall not be affected thereby, and to this extent the provisions of this law are severable.

SECTION 6
Effective Date

This Ordinance shall take effect immediately upon final passage and publication in accordance with the law.

SECTION 7
Repealer

All other Ordinance or parts of Ordinances inconsistent herewith are hereby repealed to the extent of such inconsistency.

Introduced: 6/14/05
Adopted: 6/28/05

CITY OF LONG BRANCH, MUNICIPAL BUILDING, 344 BROADWAY, LONG BRANCH, N.J. 07740 (732) 571-5645

Howard H. Woolley, Jr
Business Administrator

TO: Council Members

FROM: Howard H. Woolley, Jr.
Business Administrator

RE: Contract for Appraisal Services Pool

DATE: July 2, 2008

After examining the proposals submitted to the City of Long Branch for Appraisal Services, it is the recommendation of the Mayor and Business Administrator to award a contract for appraisal services for the term of July 1, 2008 through June 30, 2009 to:

Gagliano Appraisal, LLC
McGuire Associates, LLC
Johnson Realty Services

Based upon prior history, the City of Long Branch has determined that the above referenced appraisal companies have the experience, expertise and resources to provide the services required by the City of Long Branch.

HHW:gb

AGREEMENT

THIS AGREEMENT MADE THIS DAY OF ,

BETWEEN: **CITY OF LONG BRANCH**
344 Broadway
Long Branch, NJ 07740

Hereinafter called the **CITY**

AND

MCGUIRE ASSOCIATES, LLC
547 SUMMIT AVENUE
JERSEY CITY, NJ 07306

WITNESSETH:

WHEREAS, the City of Long Branch is desirous of retaining McGuire Associates, LLC to provide real estate appraisal services and potential expert witness testimony in various court in accordance with the proposal attached hereto.

NOW, THEREFORE, in consideration for the execution of this Agreement and the supplying of services hereunder, the parties agree as follows:

This contract is awarded as an open ended contract. During the term of the contract, a purchase order will be issued, with a not to exceed value, to authorize work for specific matters.
No services are to be provided by the contractor prior to the date of the purchase order; further, the contractor may not provide services, nor bill for services, for costs exceeding the amount of the purchase order. It is the Contractor's responsibility to notify the City prior to providing services if there are insufficient funds left
on a specific purchase order, and the insure that an amended or new purchase order has been issued by the City.

Contractor is required to bill for services on a monthly basis, at hourly rates as specified in its proposal. *Bills are to be forwarded to the City Finance Office no later that twenty-one calendar days after the end of the calendar month, or the date of the contractor's monthly billing cycle.*

1. McGuire Associates, LLC agrees to provide services.

2. Contractor will submit billing and vouchers on a monthly basis.

3. The term of said contract shall be July 1, 2008 through June 30, 2009.

4. The City will not honor any of your invoices that exceed the contract amount unless, prior to you or your firm exceeding that amount, you notify the City so that an amendment to your contract can be considered by the Mayor and Council, and, if appropriate, approved.

Due to the number of professional service contractors the City deals with, it is important for each contractor to recognize the limit of their contract, and advise the City Administrator and City Attorney of the need to continue service with an amendment to the contract.

The Administrator and Attorney would then make the appropriate recommendation to the City Council based upon the facts and circumstances, as they exist at that time.

However, please understand that this application must be made **in advance of providing any services** the cost of which would exceed the contract amount, and only after having an amended contract approved by resolution of City Council will you be authorized to proceed.

5. The Contractor certifies it complies with Affirmative Action regulations. During the performance of this contract, the contractor agrees as follows:

The contractor or subcontractor, where applicable will not discriminate against any employee or applicant for employment because of age, race, creed, color, national origin, ancestry, marital status, affectional or sexual orientation, or sex. Except with respect to affectional or sexual orientation, the contractor will take affirmative action to ensure that such applicants are recruited and employed, and that employees are treated during employment, without regard to their age, race, creed, color, national origin, ancestry, marital status, affectional or sexual orientation or sex. Such action shall include, but not be limited to the following: employment, upgrading, demotion, or transfer; recruitment or recruitment advertising; layoff or termination; rates of pay or other forms of compensation; and selection for training including apprenticeship. The contractor agrees to post in conspicuous places, available to employees and applicants for employment, notices to be provided by the Public Agency Compliance Officer, setting forth provisions of this non-discrimination clause.

The contractor or subcontractor, where applicable, will, in all solicitations or advertisements for employees placed by or on behalf of the contractor, state that all qualified applicants will receive consideration for employment without regard to their age, race, creed, color, national origin, ancestry, marital status, affectional or sexual orientation or sex.

The contractor or subcontractor, where applicable, will send to each labor union or representative of workers with which it has a collective bargaining agreement or other contract or understanding, a notice, to be provided by the agency contracting officer, advising the labor union or workers' representative of the contractor's commitments under this act and shall post copies of the

notice in conspicuous places available to employees and applicants for employment.

The contractor or subcontractor, where applicable, agrees to comply with any regulations promulgated by the Treasurer pursuant to NJSA 10:5-36 et. seq. as amended and supplemented from time to time and the Americans with Disabilities Act.

The contractor or subcontractor agrees to make good faith efforts to employ minority and women workers consistent with the applicable county employment goals established in accordance with NJAC 17:275.2, or a binding determination of the applicable county employment goals determined by the Division, pursuant to NJSA 17:275.2.

The contractor or subcontractor agrees to inform in writing its appropriate recruitment agencies including, but not limited to, employment agencies, placement bureaus, colleges, universities, labor unions, that it does not discriminate on the basis of age, creed, color, national origin, ancestry, marital status, affectional or sexual orientation or sex, and that it will discontinue the use of any recruitment agency which engages in direct or indirect discriminatory practices. The contractor or subcontractor agrees to revise any of its testing procedures, if necessary, to assure that all personnel testing conforms with the principals of job related testing, as established by the statutes and court decisions of the state of New Jersey and as established by applicable federal law and applicable federal court decisions.

In conforming with the applicable employment goals, the contractor or subcontractor agrees to review all procedures relating to transfer, upgrading, down grading and lay off to ensure that all such actions are taken without regard to age, creed, color, national origin, ancestry, marital status, sex, affectional or sexual orientation, and conform with the applicable employment goals, consistent with the statutes and court decisions of the state of New Jersey, and applicable federal law and applicable Federal court decisions.

The contractor and its subcontract shall furnish such reports or other documents to the Division of contract compliance and EEO as maybe requested by the office from time to time in order to carry out the purposes of these regulations, and public agency shall furnish information as may be requested by the Division of Contract Compliance and EEO for conducting a compliance investigation pursuant to subchapter 10 of the administrative code of NJAC 17:27.

A contractor, subcontractor or supplier who fails to provide proof of business registration or provides false business registration information shall be liable to a penalty or $25 for each day of violation, not to exceed $50,000 for each business registration not properly provided or maintained under a contract

with the contracting agency. Information of the law and its requirements is available by calling (609)292-9292.

6. The City shall publish notice of said award of this agreement in the legal ad section of its official newspaper, and shall have on file for public inspection a copy of this contract and authorizing resolution as prescribed by law.

7. "The contractor, in executing this contract document, acknowledges that it complies with City Ordinance # 18-05, annexed hereto, and New Jersey ELEC laws, rules and regulations, and has not given any political contribution that would bar it from being awarded this contract."

8. Contractor is advised that the responsibility to file an annual disclosure statement on political contributions with the New Jersey Election Enforcement commission pursuant to N.J.S.A. 19:44A-20.3 (P.L. 205, c, 271, s.3), if the contractor receives contracts in excess of $50,000 from public Entities in a calendar year. It is the contractor's responsibility to determine if filing is necessary. Additional information on this requirement is available from ELEC at 888-313-3532 or at www.elec.state.nj.us.

9. This Contract shall be binding upon the City has caused this instrument to be signed by **ADAM SCHNEIDER, MAYOR** attested by **IRENE A. JOLINE, CLERK** and the Municipal Seal to be hereunto affixed and the **CONTRACTOR** hereunto set their hand and seals, or caused these presents to be signed by their proper corporate officers and their proper corporate seal to be hereto affixed, the day and year first above mentioned.

CITY OF LONG BRANCH

by:_____
Adam Schneider, Mayor

Attested by:

Date:_____

_____
Irene A. Joline, RMC
City Clerk

CONTRACTOR

By:_____

Title:_____

Attested by:

_____

Dated:_____

CITY OF LONG BRANCH
Request for Qualifications
For Professional Service Contract

Notice is hereby given that, in accordance with N.J.S.A. 19:44-20.5, et seq, through a fair and open process, the City of Long Branch, County of Monmouth, State of New Jersey, is requesting sealed proposals/submissions for the following Professional Service(s):

Notice #FO-016-08
Date of Receipt of Proposal: Monday, June 30, 2008, at 2 pm prevailing time
Proposal for: Appraisal Services Pool for 2008-2009

Proposal/Submission packages are available at the Purchasing Office, 344 Broadway, Long Branch, NJ during normal business hours, or by calling 732-571-5656, or fax request to 732-222-1516. Sample proposal/submission package is also on file for viewing in the Office of the City Clerk.

Proposal/Submissions will be publicly opened and read by the Purchasing Agent, or designated representative, at Long Branch Municipal Building, Council Caucus Room, Second Floor, 344 Broadway, Long Branch, NJ, on the date and time noted above. Firms unable to be present for the opening of proposals may mail proposal package to the attention of the City Clerk at the above address.

Professional service contractors are required to comply with the requirements of N.J.S.A. 10:5-31 et seq, and N.J.A.C. 17:27 et seq., PL 2004, c.19, and Long Branch Pay to Play Ordinance.

Successful contractors will be required to provide, prior to award of the contract, their Affirmative Action documentation, New Jersey Business Registration (Form NJ BUS REG). Successful contractor will also be required to comply with all terms imposed by NJ Elections Laws subject to campaign funding limits, and with Long Branch Pay to Play Ordinance.

Proposals will be reviewed and award of contract will be based upon the following criteria:

- Experience and reputation of the firm in the field of real estate appraisals in New Jersey, and more specifically, of the Monmouth County shore area.

- Qualifications of the individuals who will perform the required services, and their respective participation.

- Experience of the individuals as it relates to the particular expertise required to perform the contract.

- Ability of the firm to perform the services on a timely basis, including staffing and familiarity with the subject matter.

- Experience with or specific knowledge the City of Long Branch as it pertains to this contract.

- References

- Cost consideration, including, but not limited to fee schedule to be charged, fees paid by public entities of similar size and make-up, for comparable level of services, and if applicable, cost that would be incurred by the City to contract with a new firm (i.e. estimated cost for current firm to review and close out all files, and new firm to review and get up to speed on all open files).

Successful candidates chosen from respondents will be issued open-ended master contracts, and, during the contract year of July 1, 2008 through June 30, 2009, may be requested to provide appraisal services as may be required by the City. These contracts do not guarantee that any work will actually be awarded to any, or to all, of the successful candidates.

In the event that a member of the appraisal services pool, due to a conflict concern, should disqualify itself from consideration for a contract for a specific matter, that shall not adversely affect inclusion in the pool for consideration for future contracts during the contract year.

Contract assignments for specific appraisals will be awarded on an as needed basis to individual firms based upon the required expertise as it applies to the appraisal needed, ability to perform within the required timeframe, and evaluation of a proposals provided by the firm for each appraisal task. Contract assignments will be awarded upon recommendation of the Department of Administration, and each contract will be authorized by issuance of a purchase order. <u>No work may be authorized or services provided prior to the purchase order date</u>.

Request for Qualifications for Appraisal Services

The City of Long Branch will receive qualifications from appraisal firms to provide real estate appraisal services as may be required during the contract year. The services that may be required could include, but are not limited to, residential, commercial and/or hotel appraisals, including water or oceanfront properties, New Jersey Department of Environmental Protection Green Acres real estate appraisals, expert witness testimony regarding property appraisals relative to Monmouth County Board of Taxation Property Tax Appeals and/or New Jersey State Tax Court, or in any other legal proceedings, and expert testimony regarding property appraisals relative to property condemnations in Monmouth County Superior Court, Condemnation Commission, or in any other legal proceedings.

Qualifications submission must include all of the following:

1. Name, address, phone and fax number of firm. (if multiple office sites, list all, and indicate corporate office).

2. Biography or history of the firm; staffing (i.e. number of licensed appraisers, and other technical or clerical staff).

3. List of principals and/or partners.

4. List of appraisers that would be assigned to Long Branch matters, including a summary of their educations, qualifications, expertise and experience as it relates to the various areas of appraisal services the City may require. Indicate the approximate percentage of work each would be assigned. The principals or partners assigned to Long Branch must have a minimum of 10 years experience in New Jersey real estate property appraisals.

5. List of References from at least 2 municipalities for which the firm has provided similar services, including name, address, phone and contact information.

6. Provide prior experience, if any, the firm may have providing services to the City of Long Branch, and in what capacity.

7. List of municipalities currently under contract with the firm.

8. Provide a fee schedule by title for all firm members and employees. Indicate which fees would apply for attorneys and employees assigned to Long Branch matters.

9. Provide a schedule of any and all other fees routinely charged by the firm for during the course of providing services.

10. Copy of current Certificate of Insurance for Professional Liability coverage.

One original and four (4) photocopies of the submission package must be submitted to the City for consideration. In addition to the above required information, respondents must provide all documents indicated on the Submission Package Check List. Failure to provide all required documents may result in the proposal not being considered.

Additional Pay to Play Requirements

Contractors are advised of the responsibility to file an annual disclosure statement on political contributions with the New Jersey Election Enforcement Commission, pursuant to N.J.S.A. 19:44-20.13 (P.L. 2005, c, 271, s.3), if the contractor receives contracts in excess of $50,000 in the aggregate from public entities in a calendar year. It is the contractor's responsibility to determine if filing is necessary. The report is due March 30 of each year for reporting for prior year contracts. Additional information on this requirement is available from ELEC at 888-313-3532 or at www.elec.state.nj.us.

CITY OF LONG BRANCH
DOCUMENT SUBMISSION CHECKLIST

REQUIRED		READ, SIGNED & SUBMITTED
Yes	PROPOSAL AS REQUIRED IN RFQ	☐
Yes	STOCKHOLDER DISCLOSURE CERTIFICATION	☐
Yes	NON-COLLUSION AFFIDAVIT	☐

		REVIEWED
Yes	MANDATORY AFFIRMATIVE ACTION LANGUAGE	☐
Yes	AMERICANS WITH DISABLILITIES ACT OF 1990	☐
Yes	N. J. BUSINESS REGISTRATION REQUIREMENTS	☐
Yes	LONG BRANCH PAY TO PLAY ORDINANCE	☐

STOCKHOLDER DISCLOSURE CERTIFICATION

If bidder is a sole proprietorship, check here _____
And do not complete this statement.

The UNDERSIGNED, as bidder, in accordance with P.L. 1977, Chapter 33, of the State of New Jersey, declares and submits this Statement of Ownership.

Bidder is a Corporation ( ) Partnership ( )

____ I certify that the list below contains the names and home addresses of all stockholders holding 10% or more of the issued and outstanding stock of the undersigned. (Use additional sheets in this format if necessary.)

____ I certify that no one stockholder owns 10% or more of the issued and outstanding stock of the undersigned.

Stockholder/Partner

Name_____

Home Address_____

_____

Name_____

Home Address_____

_____

Name_____

Home Address_____

_____

Name_____

Home Address_____

_____

Name_____

Home Address_____

_____

Name_____

Home Address_____

_____

(If a corporation or partnership is shown as an owner of 10% or more stock, you must attach a Stockholder Disclosure form for that corporation/partnership.)

THIS FORM MUST BE INCLUDED WITH BID SUBMISSION.

Subscribed and sworn
Before me this day

_____

_____
Notary Public
My commission expires:

_____
(Signature of Officer/Owner)

_____
(Name and Title)

(CORPORATE SEAL)

NON-COLLUSION AFFIDAVIT

STATE OF NEW JERSEY
COUNTY OF _____

I, _____ residing in _____
(name of municipality)

in the County of _____ and State of _____of full age,

being duly sworn according to law on my oath dispose and say that:

I, am _____of the firm of _____,
(title or position) (name of firm)

the bidder making this Proposal for the bid proposal entitled _____
(title of bid proposal)
_____, and that I executed the said proposal with full authority to do so,

that said bidder has not, directly or indirectly entered into any agreement, participated in any collusion, or otherwise taken any action in restraint of free, competitive bidding in connection with the above named project; and that all statements contained in said proposal and in this affidavit are true and correct, and made with full knowledge that the **City of Long Branch** relies upon the truth of the statements contained in said Proposal, and in the statements contained in this affidavit, in awarding the contract for the said project.

I further warrant that no person or selling agency has been employed or retained to solicit or secure such contract upon an agreement or understanding for a commission, percentage, brokerage, or contingent fee, except bona fide employees or bona fide established commercial or selling agencies maintained by _____.
(name of firm)

_____
(signature of affiant)

Subscribed and sworn to
before me this day

_____

_____
(signature of notary)

My Commission expires:

EXHIBIT A
MANDATORY EQUAL EMPLOYMENT OPPORTUNITY LANGUAGE
N.J.S.A. 10:5-31 et seq. (P.L. 1975, C. 127)
N.J.A.C. 17:27
GOODS, PROFESSIONAL SERVICE AND GENERAL SERVICE CONTRACTS

During the performance of this contract, the contractor agrees as follows:

The contractor or subcontractor, where applicable, will not discriminate against any employee or applicant for employment because of age, race, creed, color, national origin, ancestry, marital status, affectional or sexual orientation, gender identity or expression, disability nationality or sex. Except with respect to affectional or sexual orientation and gender identity or expression, the contractor will take affirmative action to ensure that such applicants are recruited and employed, and that employees are treated during employment, without regard to their age, race, creed, color, national origin, ancestry, marital status, affectional or sexual orientation, gender identity or expression, disability, nationality or sex. Such action shall include, but not be limited to the following: employment, upgrading, demotion, or transfer; recruitment or recruitment advertising; layoff or termination; rates of pay or other forms of compensation; and selection for training, including apprenticeship. The contractor agrees to post in conspicuous places, available to employees and applicants for employment, notices to be provided by the Public Agency Compliance Officer setting forth provisions of this nondiscrimination clause.

The contractor or subcontractor, where applicable will, in all solicitations or advertisements for employees placed by or on behalf of the contractor, state that all qualified applicants will receive consideration for employment without regard to age, race, creed, color, national origin, ancestry, marital status, affectional or sexual orientation, gender identity or expression, disability, nationality or sex.

The contractor or subcontractor, where applicable, will send to each labor union or representative or workers with which it has a collective bargaining agreement or other contract or understanding, a notice, to be provided by the agency contracting officer advising the labor union or workers' representative of the contractor's commitments under this act and shall post copies of the notice in conspicuous places available to employees and applicants for employment.

The contractor or subcontractor, where applicable, agrees to comply with any regulations promulgated by the Treasurer pursuant to N.J.S.A. 10:5-31 et seq., as amended and supplemented from time to time and the Americans with Disabilities Act.

The contractor or subcontractor agrees to make good faith efforts to employ minority and women workers consistent with the applicable county employment goals established in accordance with N.J.A.C. 17:27-5.2, or a binding determination of the applicable county employment goals determined by the Division, pursuant to N.J.A.C. 17:27-5.2.

The contractor or subcontractor agrees to inform in writing its appropriate recruitment agencies including, but not limited to, employment agencies, placement bureaus, colleges, universities, labor unions, that it does not discriminate on the basis of age, creed, color, national origin, ancestry, marital status, affectional or sexual orientation, gender identity or expression, disability, nationality or sex, and that it will discontinue the use of any recruitment agency which engages in direct or indirect discriminatory practices.

The contractor or subcontractor agrees to revise any of its testing procedures, if necessary, to assure that all personnel testing conforms with the principles of job-related testing, as established by the statutes and court decisions of the State of New Jersey and as established by applicable Federal law and applicable federal court decisions.

In conforming with the applicable employment goals, the contractor or subcontractor agrees to review all procedures relating to transfer, upgrading, downgrading and layoff to ensure that all such actions are taken without regard to age, creed, color, national origin, ancestry, marital status, affectional or sexual orientation, gender identity or expression, disability, nationality or sex, consistent with the statutes and court decisions of the State of New Jersey, and applicable Federal law and applicable Federal court decisions.

The contractor shall submit to the public agency, after notification of award but prior to execution of a goods and services contract, one of the following three documents:

Letter of Federal Affirmative Action Plan Approval
Certificate of Employee Information Report
Employee Information Report Form AA302

The contractor and its subcontractors shall furnish such reports or other documents to the Div. of Contract Compliances & EEO as may be requested by the office from time to time in order to carry out the purposes of these regulations, and public agencies shall furnish such information as may be requested by the Div. of Contract Compliance & EEO for conducting a compliance investigation pursuant to **Subchapter 10 of the Administrative Code at N.J.A.C. 17:27.**

AMERICANS WITH DISABILITIES ACT OF 1990

Equal Opportunity for Individuals with Disability

The CONTRACTOR and the OWNER do hereby agree that the provisions of Title II of the American With Disabilities Act of 1990 (the "ACT") (42 U.S.C. S12101 et seq.), which prohibits discrimination on the basis of disability by public entities in all services, programs, and activities provided or made available by public entities, and the rules and regulations promulgated pursuant thereunto, are made a part of this contract. In providing any aid, benefit, or service on behalf of the OWNER pursuant to this contract, the CONTRACTOR agrees that the performance shall be in strict compliance with the Act. In the event that the Contractor, its agents, servants, employees, or subcontractors violate or are alleged to have violated the Act during the performance of this contract, the CONTRACTOR shall defend the OWNER in any action or administrative proceeding commenced pursuant to this Act. The Contractor shall indemnify, protect, and save harmless the OWNER, its agents, servants, and employees from and against any and all suits, claims, losses, demands, or damages, of whatever kind or nature arising out of or claimed to arise out of the alleged violation. The CONTRACTOR shall, at its own expense, appear, defend, and pay any and all charges for legal services and any and all costs and other expenses arising from such action or administrative proceeding or incurred in connection therewith. In any and all complaints brought pursuant to the OWNER grievance procedure, the CONTRACTOR agrees to abide by any decision of the OWNER which is rendered pursuant to said grievance procedure. If any action or administrative proceeding results in an award of damages against the OWNER or if the
OWNER incurs any expense to cure a violation of the ADA which has been brought pursuant to its grievance procedure, the CONTRACTOR shall satisfy and discharge the same at its own expense.

The OWNER shall, as soon as practicable after a claim has been made against it, give written notice thereof to the CONTRACTOR along with full and complete particulars of the claim. If any action or administrative proceedings is brought against the OWNER or any of its agents, servants, and employees, the OWNER shall expeditiously forward or have forwarded to the CONTRACTOR every demand, complaint, notice, summons, pleading, or other process received by the OWNER or its representatives.

It is expressly agreed and understood that any approval by the OWNER of the services provided by the CONTRACTOR pursuant to this contract will not relieve the CONTRACTOR of the obligation to comply with the Act and to defend, indemnify, protect, and save harmless the OWNER pursuant to this paragraph.

It is further agreed and understood that the OWNER assumes no obligation to indemnify or save harmless the CONTRACTOR, its agents, servants, employees and subcontractors for any claim which may arise out of their performance of this Agreement. Furthermore, the CONTRACTOR expressly understands and agrees that the provisions of this indemnification clause shall in no way limit the CONTRACTOR'S obligations assumed in this Agreement, nor shall they be construed to relieve the CONTRACTOR from any liability, nor preclude the OWNER from taking any other actions available to it under any other provisions of the Agreement or otherwise at law.

CONTRACT LANGUAGE FOR
BUSINESS REGISTRATION CERTIFICATE COMPLAINCE

For Procurement (Goods and Services) Contracts
(including Purchase Orders)

N.J.S.A. 52:32-44 imposes the following requirements on contractors and all subcontractors that **knowingly** provide goods or perform services for a contractor fulfilling this contract: 1) the contractor shall provide written notice to its subcontractors to submit proof of business registration to the contractor; 2) prior to receipt of final payment from the contracting agency, a contractor must submit to the contracting agency an accurate list of all subcontractors or attest that none was used; 3) during the term of this contract, the contractor and its affiliates shall collect and remit, and shall notify all subcontractors and their affiliates that they must collect and remit to the Director, New Jersey Division of Taxation, the use tax due pursuant to the Sales and Use Tax Act, (N.J.S.A. 54:32B-1 et seq.) on all sales of tangible personal property delivered into this State.

A contractor, subcontractor or supplier who fails to provide proof of business registration or provides false business registration information shall be liable to a penalty or $25 for each day of violation, not to exceed $50,000 for each business registration not properly provided or maintained under a contract with the contracting agency. Information of the law and its requirements is available by calling (609)292-9292.

For Construction Contracts

N.J.S.A. 52:32-44 imposes the following requirements on contractors and all subcontractors that **knowingly** provide goods or perform services for a contractor fulfilling this contract:

1) The contractor shall provide written notice to its subcontractors and suppliers to submit proof of business registration to the contractor;
2) Subcontractors through all tiers of a project must provide written notice to their subcontractors and suppliers to submit proof of business registration and subcontractors shall collect proofs of business registration and maintain them on file;
3) Prior to receipt of final payment from a contracting agency, a contractor must submit to the contracting agency an accurate list of all subcontractors and suppliers or attest that none was used; and,
4) During the term of this contract, the contractor and its affiliates shall collect and remit, and shall notify all subcontractors and their affiliates that they must collect and remit, to the Director, New Jersey Division of Taxation, the use tax due pursuant to the Sales and Use Tax Act, (N.J.S.A. 52:32B-1 et seq.) on all sales of tangible personal property delivered into this State.

A contractor, subcontractor or supplier who fails to provide proof of business registration or provides false business registration information shall be liable to a penalty or $25 for each day of violation, not to exceed $50,000 for each business registration not properly provided or maintained under a contract with the contracting agency. Information of the law and its requirements is available by calling (609)292-9292.

Long Branch, New Jersey
ORDINANCE NO. 18-05

AN ORDINANCE TO AMEND AND SUPPLEMENT ORDINANCE NO. 13-05, KNOWN AS "AN ORDINANCE REQUIRING PUBLIC CONTRATING REFORM, AND AMENDING AND SUPPLEMENTING THE 'REVISED GENERAL ORDINANCES OF THE CITY OF LONG BRANCH, NEW JERSEY' ACCORDINGLY," AS ADOPTED ON MAY 10, 2005.

WHEREAS, on May 10, 2005, the City of Long Branch adopted Ordinance No. 13-05, known as "An Ordinance Requiring Public Contracting Reform, and Amending and Supplementing the 'Revised General Ordinances of the City of Long Branch, New Jersey' Accordingly" (the "Ordinance"); and

WHEREAS, the Ordinance places certain limitations upon the annual amount(s) of contributions that professionals may make to the political campaigns of the local elected officials who are ultimately responsible for the award of discretionary no-bid contracts for municipal professional services; and

WHEREAS, the intention of the Ordinance is to ensure trust in the process of local government, if not the quality or cost of services received, and to minimize any perceptions or concerns on the part of the public that discretionary no-bid contracts for municipal professional services are being awarded to professionals as a reward for having made substantial political contributions, or that the award of such contracts was influenced, even to a minor degree, by the payment of such contributions; and

WHEREAS, it is hereby found and declared that the practice of "wheeling," whereby one political organization channels campaign donations to another political organization with the intention to conceal or misrepresent the source of the contribution, may be utilized as a loophole to circumvent the proscriptions contained within the Ordinance; and

WHEREAS, the City Council of the City of Long Branch, in a continuing effort to ensure the integrity of the award of public professional service contracts, has therefore determined that it would be in the best interests of the City, and its residents, to amend the Ordinance in an attempt to curb the practice known as "wheeling;" and

WHEREAS, the City Council of the City of Long Branch also wishes to take this opportunity to clarify the "arbitration" provision referenced in Section 3(c) thereof; and

WHEREAS, the City Council of the City of Long Branch finds that it is in the best interest of the City and its residents to require that a contribution of more

than fifty dollars ($50.00) received by a candidate be reported in the manner set forth by the laws and regulations of the State of New Jersey.

NOW, THEREFORE, BE AND IT IS HEREBY ORDAINED, that Ordinance No. 13-05, known as "An Ordinance Requiring Public Contracting Reform, and Amending and Supplementing the 'Revised General Ordinances of the City of Long Branch, New Jersey' Accordingly," which was adopted on May 10, 2005, is hereby amended and supplemented as follows:

SECTION 1

Prohibition on Awarding Professional Contracts to Certain Contributors

(a) The City of Long Branch shall not enter into an agreement for professional services with any individual and/or professional business entity if that individual or entity has solicited or made any contribution of money or pledge of a contribution including in-kind contributions, to a campaign of any City of Long Branch candidate for Council or Mayor, in excess of the threshold specified in subsection (d) of this Section within one calendar year immediately preceding the date of the contract or agreement unless cured pursuant to Section 3. The prohibition set forth in this Paragraph shall also apply to any solicitation or contribution of money or pledge of a contribution including in-kind contributions made during the applicable time period to any City of Long Branch or Monmouth County Party Committee, or to any political action committee (PAC) that is organized for the primary purpose of promoting or supporting City of Long Branch candidates for Council or Mayor, so long as the solicitation or contribution was made with the intention on the part of the contributor to conceal or misrepresent the source of the contribution.

(b) No professional business entity which enters into negotiations for, or agrees to, any contact or agreement with the municipality or any department or agency thereof or any of its independent authorities for the rendition of professional services shall knowingly solicit or make any contribution of money, or pledge of a contribution, including in-kind contributions, to any City of Long Branch candidate or holder of public office having ultimate responsibility for the award of the contract, in excess of the amount set forth herein. This Section is to include any and all professionals who provide political contributions to any candidate for an office whether or not that candidate is presently in office or seeks office. The prohibition set forth in this Paragraph shall also apply to any solicitation or contribution of money or pledge of a contribution including in-kind contributions to any City of Long Branch or Monmouth County Party Committee, or to any political action committee (PAC) that is organized for the primary purpose of promoting or supporting City of Long Branch candidates for Council or Mayor, so long as the solicitation or contribution was made with the intention on the part of the contributor to conceal or misrepresent the source of the contribution.

(c) For purpose of this ordinance, a "professional business entity" seeking a public contract means an individual including the individual's spouse, if

any, and any child living at home; person; firm; corporation, professional corporation; partnership; organization; or association. The definition of a business entity includes all principals who own ten percent (10%) or more of the equity in the corporation or business trust, partners, and officers in the aggregate employed by the entity as well as any subsidiaries directly controlled by the business entity.

(d) Any individual meeting the definition of "professional business entity" under this section may annually contribute a maximum of five hundred dollars ($500.00) per candidate for Mayor and/or Council Member on an annual basis whether or not that individual has a professional services contract in place or not to the maximum extent of three thousand dollars ($3,000) per annum per business entity. This section shall apply to any presently sitting Councilperson and/or the Mayor of the City of Long Branch and shall also apply to any individual who seeks to run for the office of Council person and/or Mayor of the City of Long Branch.

(i) Any individual that owns less than ten (10%) percent of a professional business entity which contracts with the City of Long Branch shall not be treated as a part of that entity.

(e) For purposes of this section, the office that is considered to have ultimate responsibility for the award of the contract shall be:

(1) The City of Long Branch, if the contract requires approval or appropriation from the Council.

(2) The Mayor of the City of Long Branch, if the contract requires approval of the Mayor, or if a public officer who is responsible for the award of a contract is appointed by the Mayor.

SECTION 2
Contributions Made Prior to Effective Date

No contribution of money or any other thing of value, including in-kind contributions, made by a professional business entity to any municipal candidate for Mayor or Council, or to any municipal or county party committee, or to any political action committee (PAC) that is organized for the primary purpose of promoting or supporting City of Long Branch candidates for Council or Mayor, shall be deemed a violation of this section, nor shall an agreement for property, good or services, of any kind whatsoever, be disqualified thereby, if that contribution was made by the professional business entity prior to the effective date of this section.

SECTION 3
Penalty

(a) All City of Long Branch professional service agreements shall provide that it shall be a breach of the terms of the government contract for a professional business entity as defined in Section 1(c) to violate Section 1(b) or to knowingly conceal or misrepresent contributions given or received, or to make or solicit contributions through intermediaries for the purpose of concealing or misrepresenting the source of the contribution.

(b) Any professional business entity as defined in Section 1(c) and (d) who knowingly fails to reveal a contribution made in violation of this Act, or who knowingly makes or solicits contributions through intermediaries for the purpose of concealing or misrepresenting the source of the contribution, shall be subjected to a fine in the sum of $2,500 so far as the first offense and for any second offense, shall be disqualified from eligibility for future City of Long Branch contracts for a period of four calendar years from the date of the violation.

(c) There shall be no breach of contract in the event a contribution is questioned and as a result of the questioning of the contribution the individual and/or business entity who makes the contribution requests that the contribution be returned by the campaign committee, the candidate or the political action committee to whom such contribution was made. In the event of any disputes as to whether or not a campaign contribution is proper the matter shall be submitted to arbitration before a retired Judge of the Superior Court of New Jersey.

SECTION 4
Reporting Requirements

Any contribution received by a candidate committee, joint candidates committee, or political committee, during an election fund report period of more than fifty dollars ($50.00) or aggregate contributions received by such a committee in an election from a contributor totaling more than fifty dollars ($50.00) during such a report period shall be reported by providing the information set forth in N.J.A.C. 19:25-10.2

SECTION 5
Severability

If any provision of this law, or the application of any such provision to any person or circumstances, shall be held invalid, the remainder of this law to the extent it can be given effect, or the application of such provision to persons or circumstances other than those to which it is held invalid, shall not be affected thereby, and to this extent the provisions of this law are severable.

SECTION 6
Effective Date

This Ordinance shall take effect immediately upon final passage and publication in accordance with the law.

SECTION 7
Repealer

All other Ordinance or parts of Ordinances inconsistent herewith are hereby repealed to the extent of such inconsistency.

Introduced: 6/14/05
Adopted: 6/28/05

McGuire Associates, LLC

Real Estate Appraisals and Consulting

547 Summit Avenue, Jersey City, New Jersey 07306
Phone (201) 963-4444 Fax (201) 963-0914

June 24, 2008

Office of the City Clerk
City of Long Branch
344 Broadway
Long Branch, New Jersey

Re: Request for Qualifications – FO-016-08
For Professional Services
Real Estate Appraisal Services

Dear Clerk:

In response to the proposal for Real Estate Appraisal Services, my firm you like to be considered by the City for this service contract. Our firm has been providing these services to municipalities and government agencies for 30 years and are well experienced in all types of valuations from residential homes, small mixed use properties and complex commercial, industrial and investment properties.

Attached is a short profile of the company, that of myself and Albert F. Chanese from my office. I have also attached a listing of clients, qualification and references.

I have resided in the Township of Middletown for over 25 years and have worked on many projects within the County during my professional life.

Our firm has been working within the City of Long Branch since 1999 with the beginning of the Beachfront Redevelopment Project. During this time period, we have completed nearly 200 inspections and appraisal assignments, testified in over 100 commissioner hearings, and testified in superior court in Monmouth County.

Along with our work for the City, we have also completed appraisal assignments for various individuals for financing and mortgage lending.

If there is any additional information required, please do not hesitate to call.

Respectfully submitted,

Hugh A. McGuire, Jr., MAI, CRE

Request for Appraisal Services

1. **Name, address, phone and fax number of firm.**

McGuire Associates, LLC
547 Summit Avenue
Jersey City, New Jersey 07308
Phone (201) 963-4444
Fax (201) 963-0914
E-mail hugh@mcguireappraisal.com

2. **Biography or history of the firm; staffing.**

3 Licensed Appraisers
Hugh A. McGuire, Jr, MAI
Albert F. Chanese, MAI
Thomas Mirenda

1 clerical staff

Company bio attached

3. **List of principals and/or partners.**

Hugh A. McGuire, Jr., President

4. **List of appraisers that would be assigned to Long Branch matters, ...**

Hugh A. McGuire, Jr. 30+ years experience
See attached bio and qualifications
Albert F. Chanese 20+ years experience
See attached bio and qualifications

5. **List of References...**

Herbert Klitzner, Esq.
Township of North Bergen
4233 Kennedy Boulevard
North Bergen, NJ 07047
(201) 392-2010

Mayor Richard Turner
Township of Weehawken
400 Park Avenue
Weehawken, New Jersey 07087
(201) 319-6000

Abe Anton
Hudson County Administrator
565 Pavonia Avenue
Jersey City, New Jersey 07306
(201) 795-6100

Ms. Lee Currin
US Army Corp of Engineers
10 So. Howard Street, 7th Floor
Baltimore, MD 21201
(410) 962-9320

Greg Diaz, Project Manager
New Jersey Transit, Light Rail
One Penn Plaza
Newark, New Jersey
(973) 491-8230

6. **Provide prior experience, if any, the firm may have providing services to the City of Long Branch, and in what capacity.**

Our firm has been working with the City of Long Branch since 1999 with the start of the Beach Front Redevelopment. We have inspected, appraised and testified on properties location in Beachfront North, Pier Village and the Broadway Gateway Redevelopment Projects.

7. **List of Municipalities currently under contract with the firm.**

Jersey City Redevelopment Agency
Township of North Bergen
Town of West New York
Town of Weehawken

8. **Provide a fee schedule by title for all firm members and employees. Indicate which fees would apply for attorneys and employees assigned to Long Branch matters.**

Hugh A. McGuire, Jr. and Albert F. Chanese:

Meeting and conferences:	$175/hr
Commission hearing and trials:	$200/hr
Individual residential appraisal (1&2 fam.):	$650.00
Individual residential appraisal (3&4 fam.):	$850.00
Small mixed use building:	$1,500-$2,500
Larger Commercial/Industrial/Investment:	$3,000-$5,000

Larger project would be billed based in the size and scope of the project

9. **Provide a schedule of any and all other fees routinely charged by the firm for during the course of providing services**

None

10. **Copy of Current Certificate of Insurance**

See Attached

McGuire Associates
547 Summit Avenue
Jersey City, New Jersey 07306
(201) 963-4444

About The Firm

The firm of McGuire Associates was established in Jersey City in 1856 as William Robertson & Sons and has been providing appraisal and consulting services to the public and governmental agencies for more than 100 years. The company has been owned by Hugh A. McGuire, Jr., MAI, since 1976. Our staff of highly trained and licensed appraisers are available to provide services throughout the State.

The firm has represented municipalities and Counties throughout the state including Jersey City, Hoboken, North Bergen, the City of Long Branch, Carteret, Edison Township, Deal, Red Bank Middlesex County, Monmouth County and Hudson County.

We are approved by Green Acres and have worked on land acquisitions for open space in Hudson, Essex, Morris, Passaic, Somerset, Bergen, Monmouth and Middlesex Counties.

A partial listing of our clients including The United States of America, the General Services Administration, the Internal Revenue Service, Hudson County, New Jersey Transit, North Fork Bank, along with various municipalities and law firms throughout central and northern New Jersey.

Recent projects involving condemnation and litigation include:

Long Branch Redevelopment Project	City of Long Branch	1999 to present
Carteret Redevelopment Project:	Borough of Carteret	2004 to present
Bound Brook Flood Control Project:	US Army Corps of Engineers	1998 to present
Passaic River Flood Control Project	US Army Corps of Engineers	1998 to present
6th Street Embankment, Jersey City	Green Acres	2005 to present
Hudson-Bergen County Light Rail	New Jersey Transit	1996 to present
Secaucus Main Line	New Jersey Transit	2004 to 2006
Summit Heights, Jersey City	Jersey City Redev. Agency	2006
Berry Lane Park	Jersey City Redev. Agency	2007

HUGH A. McGUIRE, JR., MAI, CRE

Hugh A. McGuire, Jr. is a Certified General Real Estate Appraiser in the State of New Jersey and Maryland and holds the MAI designation from the Appraisal Institute and the CRE designation from the Counselors of Real Estate. He has served as the president of the Metro New Jersey Chapter of the Appraisal Institute and serves on several local and national committees of the Appraisal Institute.

Mr. McGuire has over 40 years experience in the appraisal field and has performed thousands of appraisal assignments in the capacity as an independent fee appraiser and as the Assessor of Hoboken and Union City. He has also acted as a consultant and appraiser to various federal, state and local government agencies.

Prior to entering the appraisal field full time, he work for New Jersey DOT in real estate acquisitions. Several of the projects he worked on included the road widening of Route 35 through Monmouth County, Route 287 in Elizabeth and Route 1 in Middlesex County.

His area of specialization is as an expert witness. He has appeared and qualified in Federal and State courts as an expert for both plaintiff and defendants in Tax Appeals, Condemnations and other valuations proceedings.

A few of the larger projects Mr. McGuire has worked on include the waterfront redevelopment of downtown Jersey City, the waterfront development of the City of Long Branch, the redevelopment of the downtown section of the Borough of Carteret, Allaire Airport in Monmouth County.

He has successfully represented both Red Bank and Deal in tax appeals of multi-million dollar properties. Mr. McGuire has been appointed by the Superior Court in Monmouth County to serve as a commissioner in condemnation hearing on properties throughout the County. He has also been appointed be the Superior Court to value properties throughout the state.

QUALIFICATIONS OF HUGH A. McGUIRE, JR., MAI, CRE

PROFESSIONAL EXPERIENCE:

1961-1964	Employed as a field representative by the Realty Appraisal Company, West New York, New Jersey
1965-1967	Employed by the New Jersey Highway Department, Bureau of Appraisals and Negotiations
1967-1974	Employed by William Robertson and Son as a staff appraiser
1974-1976	Owner and chief appraiser of William Robertson and Son
Presently	Owner of the firm of McGuire Associates, formerly William Robertson and Son

I have been qualified and testified as a real estate expert before various County Tax Boards, the Division of Tax Appeals, the Superior Court of New Jersey, the Federal District Court, Federal Bankruptcy Court, New Jersey Tax Court and various Condemnation Commissions. I have been appointed by the Superior Court to appraise various properties.

PROFESSIONAL EDUCATION

Course in Principles of Real Estate
Vale Real Estate School, Newark, New Jersey 1963

Course in Principles of Municipal Assessing
Rutgers University, Newark, New Jersey 1964

New Jersey State Highway Department
- Course in Right of Way Negotiating
- Basic Appraisal Course
- Advanced Appraisal Course

American Institute of Real Estate Appraisers
- Appraisal Study Course #I
- Appraisal Study Course #II
- Appraisal Study Course #VIII

Course of Fundamentals of Real Estate Broker

Various Real Estate Seminars and Workshops

LICENSES

Licensed Real Estate Broker in the State of New Jersey
New Jersey State Certified General Appraiser #RG 01058

QUALIFICATIONS OF HUGH A. McGUIRE, JR., MAI, CRE (Continued)

PROFESSIONAL AFFILIATIONS

Member of the Appraisal Institute, Chicago, Illinois, MAI designation
Member, American Society of Real Estate Counselors, CRE designation
Certified Tax Assessor - State of New Jersey
Member and Past President - Hudson County Municipal Assessor's Association
Member New Jersey Association of Municipal Assessors

Past President of New Jersey Chapter 1 of the American Institute of Real Estate Appraisers.

THIS DOCUMENT IS PRINTED ON WATERMARKED PAPER WITH A MULTI-TONED BACKGROUND AND MULTIPLE SECURITY FEATURES. PLEASE VERIFY AUTHENTICITY

State Of New Jersey
New Jersey Office of the Attorney General
Division of Consumer Affairs

THIS IS TO CERTIFY THAT THE

Real Estate Appraisers Board

HAS CERTIFIED

HUGH A. MCGUIRE JR
547 Summit Avenue
Jersey City NJ 07306-2701

FOR PRACTICE IN NEW JERSEY AS A(N): Certified General Appraiser

11/29/2007 TO 12/31/2009
VALID

42RG00105800
LICENSE/REGISTRATION/CERTIFICATION #

Signature of Licensee/Registrant/Certificate Holder

Lawrence DeMaio
ACTING DIRECTOR

ALBERT F. CHANESE, MAI

Albert F. Chanese is a Certified General Real Estate Appraiser in the State of New Jersey and Maryland holds the MAI designation from the Appraisal Institute. He serves on several local and national committees with the Appraisal Institute and is the incoming president of the Meter New Jersey Chapter.

He has over 20 years experience in the appraisal field and over 30 years experience in real estate sales and development. Mr. Chanese stated as a real estates sales agent in Atlantic County in the beachfront community of Brigantine, NJ. He was also involved in residential development, sales and planning with his fathers company from 1973 to 1984.

He has also acted as a consultant to New Jersey Transit in the development of the Hudson County Light Rail System.

He has experience in the valuation of all types of properties ranging from single family residential housing to complex commercial, industrial and investment properties.

His area of specialization is in the valuation of real estate for Institutional Lenders, tax appeals and estate valuation. He has appeared and qualified in State courts, commissioner hearings and county tax boards

Mr. Chanese has worked various projects throughout the state including the waterfront development of the City of Long Branch, the redevelopment of the downtown section of the Borough of Carteret, Edison Township Raritan River walkway, the Green Brook and Passaic River Flood Control Projects with the Army Corp of Engineers and well and the valuation of the US Army Reserve Center in Jersey City.

QUALIFICATIONS OF ALBERT F. CHANESE, MAI:

PROFESSIONAL EXPERIENCE:

September 1994 to Present: Staff Appraiser, McGuire Associates. From 1983 to 1994: Employed by Fuller Appraisal Associates, Inc., as a Staff Appraiser. Diversified experience includes appraisals of residential, apartment buildings, office buildings, industrial properties, vacant land, nursing homes, auto dealerships and other special use properties, as well as lease analysis and feasibility studies and subdivision analysis. Actively engaged in the real estate industry since 1975.

PROFESSIONAL EDUCATION:

American Institute of Real Estate Appraisers Courses:

- Principles of Real Estate Appraising
- Residential Valuation
- Basic Valuation Procedures
- Theory and Techniques of Capitalization
- Case Studies and Report Writing - Course 2-2
- Standards of Professional Practice

National Association of Independent Fee Appraisers:

- Residential Real Estate Appraising Course

Graduate - Realtor Institute - National Association of Realtors - GRI designation

PROFESSIONAL AFFILIATIONS:

Member, Appraisal Institute, MAI designation,
Certificate No. 9636
Certified General Appraiser, State of New Jersey
License No. RG00106 through December 31, 2007

THIS DOCUMENT IS PRINTED ON WATERMARKED PAPER WITH A MULTI-COLORED BACKGROUND AND MULTIPLE SECURITY FEATURES. PLEASE VERIFY AUTHENTICITY.

State Of New Jersey
New Jersey Office of the Attorney General
Division of Consumer Affairs

THIS IS TO CERTIFY THAT THE
Real Estate Appraisers Board

HAS CERTIFIED

ALBERT F. CHANESE
54 HAMILTON AVENUE
FORDS NJ 08863-1946

FOR PRACTICE IN NEW JERSEY AS A(N): Certified General Appraiser

12/02/2007 TO 12/31/2009
VALID

Signature of Licensee/Registrant/Certificate Holder

42RG00010600
LICENSE/REGISTRATION/CERTIFICATION #

Lawrence DeMayo
ACTING DIRECTOR

Date Issued:	Policy Number:	Previous Policy Number:
10/10/2007	LIU000395-007	LIU000395-006

REAL ESTATE APPRAISERS PROFESSIONAL LIABILITY

Liberty Insurance Underwriters Inc.

55 Water Street, 18th Floor
New York, NY 10041

THIS IS A CLAIMS MADE AND REPORTED POLICY. PLEASE READ IT CAREFULLY.

LIBERTY INSURANCE UNDERWRITERS, INC. (herein called "the Company")

Item

DECLARATIONS

1. **Customer ID:** 135223
   Named Insured:
   MCGUIRE ASSOCIATES, LLC
   547 Summit Avenue
   Jersey City, NJ 07306

2. **Policy Period:**
   From: 11/01/2007 **To:** 11/01/2008
   12:01 A.M. Standard Time at the address stated in Item 1.

3. **Deductible: $1,000.00** Each Claim

4. **Retroactive Date:** 11/01/1995

5. **Inception Date:** 11/01/2001

6. **Limits of Liability:**
   A. $1,000,000.00 Each Claim
   B. $1,000,000.00 Aggregate

   The Limit of Liability for Each Claim and in the Aggregate is reduced by Damages and Claims Expenses as defined in the Policy.

7. **Mail All Notices to Agent:**
   Liability Insurance Administrators
   1600 Anacapa Street
   Santa Barbara, California 93101
   (805) 963-6624; Fax: (805) 962-0652

8. **Annual Premium:** $3,848.00
   + $62.00 NJ P/L Ins Guaranty S/C

9. **Number of Appraisers:** 3

10. **Forms attached at issue: LIA002 (07/01) LIA009 (10/01) LIA012 (07/01) LIA013 (07/01) LIA018 (07/01) LIA025 (07/01)**

This Declarations Page together with the completed and signed Policy Application including all attachments and exhibits thereto, and the Real Estate Appraisers Professional Liability Insurance Policy shall constitute the contract between the Named Insured and the Company.

By _____
Authorized Signature

THIS ENDORSEMENT CHANGES THE POLICY. PLEASE READ IT CAREFULLY

ADDITIONAL COVERED PERSONS ENDORSEMENT

This endorsement, effective on 11/01/2007 at 12:01 A.M. standard time at the address of the Named Insured

Forms a part of Policy Number: LIU000395-007

Issued to: MCGUIRE ASSOCIATES, LLC

It is agreed that Section IV of the Policy, Definition (H) is amended to include:

"**Insured**" means:

The persons identified below, but only while acting on behalf of the Named Insured:

Name	Coverage Effective Date	Principal/Owner, Appraiser or Trainee
Hugh A. McGuire, Jr.	11/01/2007	Principal/Owner
Albert F. Chanese	11/01/2007	Appraiser
Daniel Hanrahan	11/01/2007	Appraiser

All other terms and conditions of this Policy remain unchanged.

135223/dd

THIS ENDORSEMENT CHANGES THE POLICY. PLEASE READ IT CAREFULLY.

COMMERCIAL APPRAISAL ENDORSEMENT

This endorsement, effective on 11/01/2007, at 12:01 A.M. standard time at the address of the Named Insured

Forms a part of Policy Number: LIU000395-007

Issued to: MCGUIRE ASSOCIATES, LLC

It is agreed that the following **Insureds** have been approved by the Company to perform **Professional Services** involving commercial property:

Insured	Effective Date of Approval
Thomas J. Mirenda	11/01/2007

All other terms and conditions of this Policy remain unchanged.

Certification 19796

CERTIFICATE OF EMPLOYEE INFORMATION REPORT

RENEWAL

This is to certify that the contractor listed below has submitted an Employee Information Report pursuant to N.J.A.C. 17:27-1.1 et. seq. and the State Treasurer has approved said report. This approval will remain in effect for the period of 15-SEP-2002 to 15-SEP-2009

MCGUIRE ASSOCIATES LLC
547 SUMMIT AVENUE
JERSEY CITY NJ 07306

Bradley Abelow
State Treasurer

STATE OF NEW JERSEY
BUSINESS REGISTRATION CERTIFICATE

DEPARTMENT OF TREASURY/
DIVISION OF REVENUE
PO BOX 252
TRENTON, N J 08646-0252

TAXPAYER NAME:
MCGUIRE ASSOCIATES LLC

TRADE NAME:

ADDRESS:
547 SUMMIT AVE
JERSEY CITY NJ 07306

SEQUENCE NUMBER:
1197777

EFFECTIVE DATE:
12/12/05

ISSUANCE DATE:
07/06/07

James J. Fusaro
Acting Director
New Jersey Division of Revenue

FORM-BRC(08-01)

This Certificate is NOT assignable or transferable. It must be conspicuously displayed at above address.

NON-COLLUSION AFFIDAVIT

STATE OF NEW JERSEY
COUNTY OF Hudson

I, Hugh A. McGuire, Jr. residing in Twp. Of Middletown (name of municipality) in

the County of Monmouth and the State of New Jersey, of full age, being

duly sworn according to law on my oath depose and say that:

I, am President/Owner (title or position) of the firm of McGuire Associates, LLC (Name of Firm),

the bidder making this Proposal for the bid proposal entitled Professional Appraisal (title of bid proposal)

Services , and that I executed the said proposal with full authority to do so, that said bidder has

not, directly or indirectly entered into and agreement, participated in any conclusion, or otherwise taken and action in restraint of free, competitive bidding in connection with the above named project; and that all statements contained in said proposal and in this affidavit are true and correct, and made with full knowledge that the **CITY OF LONG BRANCH** relies upon the truth of the statements contained in said Proposal, and in the statements contained in this affidavit, in awarding the contract for said project.

I further warrant that no person or selling agency has been employed or retained to solicit or secure such contract upon an agreement or understanding for a commission, percentage, brokerage or contingent fee, except bona fide employees or bona fide established, commercial or selling agencies maintained by: McGuire Associates, LLC. (name of firm)

Subscribed and sworn to
before me this day
June 27 2008

(signature of affiant)

(signature of notary)

TINA L. DePINTO
A Notary Public of New Jersey
My Commission Expires
3-25-12

REQUIRED EVIDENCE
AFFIRMATIVE ACTION REGULATION
P.L. 1975, C. 127 (N.J.A.C. 17:27)

If awarded a contract, all procurement and service contractors will be required to comply with the requirements of P.L. 1975, c. 127, (N.J.A.C. 17:27). Within seven (7) days after receipt of the notification of intent to award the contract or receipt of the contract, whichever is sooner, the contractor should present one of the following to the Purchasing Agent.

1. **A photocopy of a valid letter from the U.S. Department of Labor that the contractor has an existing federally-approved or sanctioned Affirmative Action Plan (good for one year from the date of the letter).**

   OR

2. **A photocopy of approved Certificate of Employee Information Report from the State of New Jersey.**

   OR

3. **An Affirmative Action Employee Information Report (Form AA302).**

   OR

4. **All successful construction contractors must submit, within three days (3) of the signing of the contract, an Initial Project Manning Report (AA201) for any contract award that meets or exceeds the Public Agency bidding threshold (available upon request).**

NO FIRM MAY BE ISSUED A CONTRACT UNLESS IT COMPLIES WITH THE AFFIRMATIVE ACTION REGULATIONS OF P.L. 1975, C. 127.

The following questions must be answered by all bidders:

1. Do you have a federally-approved or sanctioned Affirmative Action Program?

___Yes ___No If yes, please submit copy of such approval.

2. Do you have a Certificate of Employee Information Report Approval?

___Yes ___No If yes, please submit copy of such certificate.

The undersigned contractor certifies that he is aware of the commitment to comply with the requirements of P.L. 1975, c. 127, and agrees to furnish the required documentation pursuant to law.

COMPANY: MCGUIRE ASSOCIATES, LLC

SIGNATURE:

TITLE: OWNER

NOTE: A CONTRACTOR'S BID MUST BE REJECTED AS NON-RESPONSIVE IF A CONTRACTOR FAILS TO COMPLY WITH REQUIREMENTS OF P.L.1975, C. 127, WITHIN THE REQUIRED TIME FRAME.

STOCKHOLDER DISCLOSURE CERTIFICATION

If bidder is a sole proprietorship, check here _____
And do not complete this statement.

The UNDERSIGNED, as bidder, in accordance with P.L. 1977, Chapter 33, of the State of New Jersey, declares and submits this Statement of Ownership.

Bidder is a Corporation ( ) LLC Partnership ( )

✓ I certify that the list below contains the names and home addresses of all stockholders holding 10% or more of the issued and outstanding stock of the undersigned. (Use additional sheets in this format if necessary.)

____ I certify that no one stockholder owns 10% or more of the issued and outstanding stock of the undersigned.

Stockholder/Partner

Name HUGH A. MCGUIRE, JR.
Home Address 166 MARVIN ROAD
MIDDLETOWN, NJ 07748

Name _____
Home Address _____

Name _____
Home Address _____

Name _____
Home Address _____

Name _____
Home Address _____

Name _____
Home Address _____

Name _____
Home Address _____

(If a corporation or partnership is shown as an owner of 10% or more stock, you must attach a Stockholder Disclosure form for that corporation/partnership.)

THIS FORM MUST BE INCLUDED WITH BID SUBMISSION.

Subscribed and sworn
Before me this day
June 27 2008
Tina L. DePinto
Notary Public
My commission expires:

TINA L. DePINTO
A Notary Public of New Jersey
My Commission Expires
3.25.12.

(Signature of Officer/Owner)

Owner
(Name and Title)

(CORPORATE SEAL)

CITY OF LONG BRANCH
DOCUMENT SUBMISSION CHECKLIST

REQUIRED		READ, SIGNED & SUBMITTED
Yes	PROPOSAL AS REQUIRED IN RFQ	☑
Yes	STOCKHOLDER DISCLOSURE CERTIFICATION	☑
Yes	NON-COLLUSION AFFIDAVIT	☑
Yes	AFFIRMATIVE ACTION QUESTIONAIRE	☑

		REVIEWED
Yes	MANDATORY AFFIRMATIVE ACTION LANGUAGE	☑
Yes	AMERICANS WITH DISABLILITIES ACT OF 1990	☑
Yes	N. J. BUSINESS REGISTRATION LANGUAGE	☑
Yes	LONG BRANCH PAY TO PLAY ORDINANCE	☑

CITY OF LONG BRANCH, MUNICIPAL BUILDING, 344 BROADWAY, LONG BRANCH, N.J. 07740 (732) 571-5645

Howard H. Woolley, Jr
Business Administrator

TO: Council Members

FROM: Howard H. Woolley, Jr.
Business Administrator

RE: Contract for Appraisal Services Pool

DATE: July 2, 2008

After examining the proposals submitted to the City of Long Branch for Appraisal Services, it is the recommendation of the Mayor and Business Administrator to award a contract for appraisal services for the term of July 1, 2008 through June 30, 2009 to:

Gagliano Appraisal, LLC
McGuire Associates, LLC
Johnson Realty Services

Based upon prior history, the City of Long Branch has determined that the above referenced appraisal companies have the experience, expertise and resources to provide the services required by the City of Long Branch.

HHW:gb

AGREEMENT

THIS AGREEMENT MADE THIS DAY OF ,

BETWEEN: **CITY OF LONG BRANCH**
344 Broadway
Long Branch, NJ 07740

Hereinafter called the **CITY**

AND

Johnson Realty Services
P O Box 434
Sea Girt, NJ 08750

WITNESSETH:

WHEREAS, the City of Long Branch is desirous of retaining Johnson Realty Services to provide real estate appraisal services and potential expert witness testimony in various court in accordance with the proposal attached hereto.

NOW, THEREFORE, in consideration for the execution of this Agreement and the supplying of services hereunder, the parties agree as follows:

This contract is awarded as an open ended contract. During the term of the contract, a purchase order will be issued, with a not to exceed value, to authorize work for specific matters.
No services are to be provided by the contractor prior to the date of the purchase order; further, the contractor may not provide services, nor bill for services, for costs exceeding the amount of the purchase order. It is the Contractor's responsibility to notify the City prior to providing services if there are insufficient funds left
on a specific purchase order, and the insure that an amended or new purchase order has been issued by the City.

Contractor is required to bill for services on a monthly basis, at hourly rates as specified in its proposal. *Bills are to be forwarded to the City Finance Office no later that twenty-one calendar days after the end of the calendar month, or the date of the contractor's monthly billing cycle.*

1. Johnson Realty Services agrees to provide services.

2. Contractor will submit billing and vouchers on a monthly basis.

3. The term of said contract shall be July 1, 2008 through June 30, 2009.

4. The City will not honor any of your invoices that exceed the contract amount unless, prior to you or your firm exceeding that amount, you notify the City so that an amendment to your contract can be considered by the Mayor and Council, and, if appropriate, approved.

Due to the number of professional service contractors the City deals with, it is important for each contractor to recognize the limit of their contract, and advise the City Administrator and City Attorney of the need to continue service with an amendment to the contract.

The Administrator and Attorney would then make the appropriate recommendation to the City Council based upon the facts and circumstances, as they exist at that time.

However, please understand that this application must be made **in advance of providing any services** the cost of which would exceed the contract amount, and only after having an amended contract approved by resolution of City Council will you be authorized to proceed.

5. The Contractor certifies it complies with Affirmative Action regulations. During the performance of this contract, the contractor agrees as follows:

The contractor or subcontractor, where applicable will not discriminate against any employee or applicant for employment because of age, race, creed, color, national origin, ancestry, marital status, affectional or sexual orientation, or sex. Except with respect to affectional or sexual orientation, the contractor will take affirmative action to ensure that such applicants are recruited and employed, and that employees are treated during employment, without regard to their age, race, creed, color, national origin, ancestry, marital status, affectional or sexual orientation or sex. Such action shall include, but not be limited to the following: employment, upgrading, demotion, or transfer; recruitment or recruitment advertising; layoff or termination; rates of pay or other forms of compensation; and selection for training including apprenticeship. The contractor agrees to post in conspicuous places, available to employees and applicants for employment, notices to be provided by the Public Agency Compliance Officer, setting forth provisions of this non-discrimination clause.

The contractor or subcontractor, where applicable, will, in all solicitations or advertisements for employees placed by or on behalf of the contractor, state that all qualified applicants will receive consideration for employment without regard to their age, race, creed, color, national origin, ancestry, marital status, affectional or sexual orientation or sex.

The contractor or subcontractor, where applicable, will send to each labor union or representative of workers with which it has a collective bargaining agreement or other contract or understanding, a notice, to be provided by the agency contracting officer, advising the labor union or workers' representative of the contractor's commitments under this act and shall post copies of the

notice in conspicuous places available to employees and applicants for employment.

The contractor or subcontractor, where applicable, agrees to comply with any regulations promulgated by the Treasurer pursuant to NJSA 10:5-36 et. seq. as amended and supplemented from time to time and the Americans with Disabilities Act.

The contractor or subcontractor agrees to make good faith efforts to employ minority and women workers consistent with the applicable county employment goals established in accordance with NJAC 17:275.2, or a binding determination of the applicable county employment goals determined by the Division, pursuant to NJSA 17:275.2.

The contractor or subcontractor agrees to inform in writing its appropriate recruitment agencies including, but not limited to, employment agencies, placement bureaus, colleges, universities, labor unions, that it does not discriminate on the basis of age, creed, color, national origin, ancestry, marital status, affectional or sexual orientation or sex, and that it will discontinue the use of any recruitment agency which engages in direct or indirect discriminatory practices. The contractor or subcontractor agrees to revise any of its testing procedures, if necessary, to assure that all personnel testing conforms with the principals of job related testing, as established by the statutes and court decisions of the state of New Jersey and as established by applicable federal law and applicable federal court decisions.

In conforming with the applicable employment goals, the contractor or subcontractor agrees to review all procedures relating to transfer, upgrading, down grading and lay off to ensure that all such actions are taken without regard to age, creed, color, national origin, ancestry, marital status, sex, affectional or sexual orientation, and conform with the applicable employment goals, consistent with the statutes and court decisions of the state of New Jersey, and applicable federal law and applicable Federal court decisions.

The contractor and its subcontract shall furnish such reports or other documents to the Division of contract compliance and EEO as maybe requested by the office from time to time in order to carry out the purposes of these regulations, and public agency shall furnish information as may be requested by the Division of Contract Compliance and EEO for conducting a compliance investigation pursuant to subchapter 10 of the administrative code of NJAC 17:27.

A contractor, subcontractor or supplier who fails to provide proof of business registration or provides false business registration information shall be liable to a penalty or $25 for each day of violation, not to exceed $50,000 for each business registration not properly provided or maintained under a contract

with the contracting agency. Information of the law and its requirements is available by calling (609)292-9292.

6. The City shall publish notice of said award of this agreement in the legal ad section of its official newspaper, and shall have on file for public inspection a copy of this contract and authorizing resolution as prescribed by law.

7. "The contractor, in executing this contract document, acknowledges that it complies with City Ordinance # 18-05, annexed hereto, and New Jersey ELEC laws, rules and regulations, and has not given any political contribution that would bar it from being awarded this contract."

8. Contractor is advised that the responsibility to file an annual disclosure statement on political contributions with the New Jersey Election Enforcement commission pursuant to N.J.S.A. 19:44A-20.3 (P.L. 205, c, 271, s.3), if the contractor receives contracts in excess of $50,000 from public Entities in a calendar year. It is the contractor's responsibility to determine if filing is necessary. Additional information on this requirement is available from ELEC at 888-313-3532 or at www.elec.state.nj.us.

9. This Contract shall be binding upon the City has caused this instrument to be signed by **ADAM SCHNEIDER, MAYOR** attested by **IRENE A. JOLINE, CLERK** and the Municipal Seal to be hereunto affixed and the **CONTRACTOR** hereunto set their hand and seals, or caused these presents to be signed by their proper corporate officers and their proper corporate seal to be hereto affixed, the day and year first above mentioned.

CITY OF LONG BRANCH

by:_____
Adam Schneider, Mayor

Attested by:

Date:_____

_____
Irene A. Joline, RMC
City Clerk

CONTRACTOR

By:_____

Title:_____

Attested by:

_____

Dated:_____

JRS
JOHNSON REALTY SERVICES

PAUL R. JOHNSON MAI, CRE

JOHN G. SIDWAY, ASSOCIATE

June 30, 2008

Governing Body
City of Long Branch
Long Branch Municipal Building
Council Caucus Room, Second Floor
344 Broadway
Long Branch, NJ 07740

RE: Proposal for Appraisal Services Pool for 2008-2009

Ladies and Gentlemen:

We are interested in performing appraisal and consulting services for the City of Long Branch, and we believe our firm is uniquely qualified to do so. Our professional qualifications are attached, but we have highlighted them as follows:

Experience:

- 30 Continuous Years of Appraisal Experience
- Extensive Governmental Appraisal Experience
- Private Practice and Land Developmental Entrepreneurial Experience

Special Skills:

Property Acquisition for Public Open Space (Green Acres)

Performed For:

New Jersey Department of Environmental Protection
Mr. John Smith, Appraiser Reviewer
NJ DEP Green Acres – Trenton
(609) 984-0538

"A Trusted Name in Valuation, Consulting and Commercial Brokerage"
Mailing Address: P.O. Box 434 • SEA GIRT, NEW JERSEY 08750 • TEL: (732) 449-1400 • FAX: (732) 449-1333
www.johnsonrealtyservices.com

Monmouth County Park System
Mr. James Truncer, Director
(732) 842-4000 Ext. 4215

Monmouth Conservation Foundation
Ms. Adele Keller, Executive Director
(732) 671-7000

Notable Projects:

- Seaside Park and Bay Head Marinas
- Timolat Farm, Locust, 100 Acres
- Fischer Stern Estate, Locust Riverfront, 44 Acres
- Annarella Farm, Middletown
- Lemco Tract, Long Branch, High Density Residential, 8 Acres
- Fisherman's Cove, Manasquan Riverfront, 50 Acres
- Rocky Brook Tracts, Roosevelt, Millstone, 600 Acres

Right of Way Roads and Bridges:

Performed For:

New Jersey Department of Transportation
Kevin Rittenberry, SDAG, Chief Counsel
Division of Law
(609) 292-4254

Notable Projects:

- New Jersey Route 37, West Improvement Project
- Hooper Avenue Improvement Project
- NJ Route 17 & NJ Route 4 Interchange, Paramus, Bergen County (Major Retail, State's First Flyover Interchange)
- Route 1 Improvements, Woodbridge, Middlesex County (Woodbridge Mall Area)
- Shark River Bridge, NJ Route 35, Belmar and Neptune (Marinas, Restaurants, Industrial Riparian Rights)
- Mantoloking Bridge, Barnegat Bay, Mantoloking and Brick Township (High-priced homes/land and Marinas)
- Manasquan River Bridge, NJ Route 70, Brielle and Brick Townships (Homes, Marinas, Restaurants)

Eminent Domain:

Performed For:

Township of Wall
Roger J. McLaughlin, Esq.
Township of Wall
(732) 919-1155

Notable Projects:

- Wall Auto Wreckers, 9 Acres "Redevelopment District"

Township of Howell
Thomas G. Gannon, Esq.
Hiering & Gannon
(732) 349-1800

Notable Projects:

- Harms Tract, 150 Acres, Approved Subdivision Adjacent to Manasquan Reservoir
- NJ Route 9, Sanitary Sewer Easements

Special Assessments:

Performed For:

Township of Wall
Joseph Verruni, Township Administrator
Township of Wall
(732) 449-8444

- Special Public Benefit Assessments Performed over a 10-Year Period.

State Agricultural Development Committee Farmland Preservation Easements:

Performed For:

Township of Howell

Township of Upper Freehold

Township of Millstone

Township of Colts Neck

Borough of Roosevelt

Notable Projects:

- Jennings Stud Farm, Upper Freehold
- Casola Farm

We have extensive litigation experience through Eminent Domain jury trial testimony in support of our appraisal services, yet we have demonstrated a high rate of settlement avoiding the cost of these proceedings.

Our experience extends throughout Ocean and Monmouth Counties.

Held in high regard, are the individual's rights of private property as well as the interest of government to carry out the purpose of land use controls for the general welfare of the populace. In all cases, a property owner is treated respectfully.

Attached are the requested completed forms and checklist. Johnson Realty Services would like to be given an opportunity to perform services for the City of Long Branch.

Sincerely,

John G. Sidway
Partner
Licensed Appraiser Apprentice

JGS:cls
Enclosures

ADDITIONAL INFORMATION REQUESTED FOR PROPOSAL

Johnson Realty Services
412 Boston Boulevard
P.O. Box 434 (Mailing Address)
Sea Girt, NJ 08750
(732) 449-1400
(732) 608-9584 fax

Johnson Realty Services has over 30 years experience in performing appraisals and consulting services for various government entities, financial institutions, and private clients. We have an impeccable record of delivering appraisals in a timely fashion. Typically, it will take our firm less than thirty (30) days to perform an appraisal with exceptions either way. We have been known to deliver a report for a municipality in under ten (10) days, if that is the request of our client.

Description of Support Staff at Appraisal Firm:

Johnson Realty Services if comprised of three (3) employees.

Paul R. Johnson, MAI, CRE, Partner, is licensed by the State of New Jersey to perform all types of Real Estate Appraisals, and he is a member of the Appraisal Institute and the Counselors of Real Estate, an international group of professionals who advise on complex Real Estate matters. Mr. Johnson has provided expert testimony for various entities in eminent domain proceedings. He has over 25+ years working as an appraiser.

John G. Sidway, Partner, is a Licensed Appraisal Apprentice and a MAI candidate for 2008. Mr. Sidway is also a member of the national Appraisal Institute. He has over six years experience performing appraisal services. Mr. Sidway oversees all day-to-day operations of the Appraisal firm.

Johnson Realty Services has an Administrative Assistant who has over 8 years experience handling day-to-day office procedures, including but not limited to bookkeeping, reception, typing services, etc.

Individuals Performing Appraisals:

Paul R. Johnson, MAI, CRE, Partner
(Mr. Johnson would be completing the work for Appraisal Services under the requirement for the City of Long Branch, since he has over the 10-year requirement suggested by the City.)

John G. Sidway, Licensed Appraisal Apprentice, Partner

Licensing, Certificates, and Degrees:

(2 Individuals holding licenses)

Paul R. Johnson:

- CRE, Counselor of Real Estate
- MAI, Member Appraisal Institute (held by State of New Jersey Division of Banking and Insurance)
- State Certified General Real Estate Appraiser # 485 (held by State of New Jersey Division of Banking and Insurance)
- Licensed Real Estate Broker 25+ Years

John G. Sidway:

- Appraiser Apprentice License (held by State of New Jersey Division of Banking and Insurance)
- Sales Associate License
- Rutgers University, MBA, 2001
- Monmouth University, Bachelor's of Science, Business Administration Major, Mathematics Minor, 2000

Listing of Professional Affiliations or Memberships:

Paul R. Johnson:

MAI, Highest Accreditation for any Appraiser, Member of Appraisal Institute
CRE, Counselor of Real Estate, Organization of highly skilled and trained Real Estate Professionals that provide in depth analysis to difficult Real Estate issues.

John G. Sidway:

Member of Appraisal Institute and a MAI candidate for 2008.
Member of FBLA.

List of Professional References:

Joseph Verruni, Township Administrator
Township of Wall
P.O. Box 1168
Wall, NJ 07719
(732) 449-8444

David Mooij, Superintendent of Schools
Township of Neptune
3301 B. Route 66
Neptune, NJ 07753
(732) 776-2000

Kevin Rittenberry, SDAG
NJ DOT
Legal Processing
P.O. Box 114
Trenton, NJ 08625
(609) 292-4254

Experience with City of Long Branch:

Johnson Realty Services has not performed any appraisal services for the City of Long Branch within the past five years.

List of Experience and Contractual Relationships with Other Municipalities:

Township of Wall
Township Appraiser
1998 to 2008, currently

Township of Toms River
Township Appraiser
2008

Borough of Tinton Falls
Township Appraiser
2008

Schedule of Hourly Rates:

Principal Appraiser:	$150.00 per hour
Associate Appraiser:	$ 75.00 per hour
Administrative Assistant:	$ 50.00 per hour
Supplies Cost Plus:	50%

Expense for travel, postage, and telephone are included in the hourly rates listed above.

ACORD™ CERTIFICATE OF LIABILITY INSURANCE

DATE (MM/DD/YYYY) 03/31/2008

PRODUCER (732)449-3800 FAX (732)974-2065
Danskin Insurance Agency, Inc.
1937 Highway 35
Wall Township, NJ 07719
Sara E. VanWickle

THIS CERTIFICATE IS ISSUED AS A MATTER OF INFORMATION ONLY AND CONFERS NO RIGHTS UPON THE CERTIFICATE HOLDER. THIS CERTIFICATE DOES NOT AMEND, EXTEND OR ALTER THE COVERAGE AFFORDED BY THE POLICIES BELOW.

INSURED
Johnson Realty Services, LLC
PO Box 434
Sea Girt, NJ 08750

INSURERS AFFORDING COVERAGE	NAIC #
INSURER A: FRANKLIN MUTUAL	
INSURER B: CNA	
INSURER C:	
INSURER D:	
INSURER E:	

COVERAGES

THE POLICIES OF INSURANCE LISTED BELOW HAVE BEEN ISSUED TO THE INSURED NAMED ABOVE FOR THE POLICY PERIOD INDICATED. NOTWITHSTANDING ANY REQUIREMENT, TERM OR CONDITION OF ANY CONTRACT OR OTHER DOCUMENT WITH RESPECT TO WHICH THIS CERTIFICATE MAY BE ISSUED OR MAY PERTAIN, THE INSURANCE AFFORDED BY THE POLICIES DESCRIBED HEREIN IS SUBJECT TO ALL THE TERMS, EXCLUSIONS AND CONDITIONS OF SUCH POLICIES. AGGREGATE LIMITS SHOWN MAY HAVE BEEN REDUCED BY PAID CLAIMS.

INSR LTR	ADD'L INSRD	TYPE OF INSURANCE	POLICY NUMBER	POLICY EFFECTIVE DATE (MM/DD/YY)	POLICY EXPIRATION DATE (MM/DD/YY)	LIMITS	
A		GENERAL LIABILITY X COMMERCIAL GENERAL LIABILITY CLAIMS MADE X OCCUR GEN'L AGGREGATE LIMIT APPLIES PER: POLICY PRO-JECT X LOC	SBP2560188	02/06/2008	02/06/2009	EACH OCCURRENCE DAMAGE TO RENTED PREMISES (Ea occurrence) MED EXP (Any one person) PERSONAL & ADV INJURY GENERAL AGGREGATE PRODUCTS - COMP/OP AGG	$ 1,000,000 $ 50,000 $ 15,000 $ 1,000,000 $ 1,000,000 $ 1,000,000
A		AUTOMOBILE LIABILITY ANY AUTO ALL OWNED AUTOS SCHEDULED AUTOS X HIRED AUTOS X NON-OWNED AUTOS	SBP2560188	02/06/2008	02/06/2009	COMBINED SINGLE LIMIT (Ea accident) BODILY INJURY (Per person) BODILY INJURY (Per accident) PROPERTY DAMAGE (Per accident)	$ 1,000,000 $ $ $
		GARAGE LIABILITY ANY AUTO				AUTO ONLY - EA ACCIDENT OTHER THAN AUTO ONLY: EA ACC AGG	$ $ $
A		EXCESS/UMBRELLA LIABILITY X OCCUR CLAIMS MADE DEDUCTIBLE X RETENTION $ 10,000	XLP2560187	02/06/2008	02/06/2009	EACH OCCURRENCE AGGREGATE	$ 2,000,000 $ 2,000,000
A		WORKERS COMPENSATION AND EMPLOYERS' LIABILITY ANY PROPRIETOR/PARTNER/EXECUTIVE OFFICER/MEMBER EXCLUDED? If yes, describe under SPECIAL PROVISIONS below	WCP2720423	02/06/2008	02/06/2009	X WC STATU-TORY LIMITS OTH-ER E.L. EACH ACCIDENT E.L. DISEASE - EA EMPLOYEE E.L. DISEASE - POLICY LIMIT	$ 1,000,000 $ 1,000,000 $ 1,000,000
B		OTHER PROFESSIONAL LIABILITY CLAIMS-MADE FORM	RNP2-7605215-8-07	12/14/2007	12/14/2008	EACH CLAIM	$ 1,000,000

DESCRIPTION OF OPERATIONS / LOCATIONS / VEHICLES / EXCLUSIONS ADDED BY ENDORSEMENT / SPECIAL PROVISIONS
REAL ESTATE APPRAISAL

CERTIFICATE HOLDER

CANCELLATION

SHOULD ANY OF THE ABOVE DESCRIBED POLICIES BE CANCELLED BEFORE THE EXPIRATION DATE THEREOF, THE ISSUING INSURER WILL ENDEAVOR TO MAIL 10 DAYS WRITTEN NOTICE TO THE CERTIFICATE HOLDER NAMED TO THE LEFT, BUT FAILURE TO MAIL SUCH NOTICE SHALL IMPOSE NO OBLIGATION OR LIABILITY OF ANY KIND UPON THE INSURER, ITS AGENTS OR REPRESENTATIVES.

AUTHORIZED REPRESENTATIVE

©ACORD CORPORATION 1988

STATE OF NEW JERSEY

BUSINESS REGISTRATION CERTIFICATE

DEPARTMENT OF TREASURY/
DIVISION OF REVENUE
PO BOX 252
TRENTON, N J 08646-0252

TAXPAYER NAME:

JOHNSON REALTY SERVICES, LIMITED LIABIL

TRADE NAME:

ADDRESS:

412 BOSTON BLVD
SEA GIRT NJ 08750

SEQUENCE NUMBER:

1389758

EFFECTIVE DATE:

02/06/08

ISSUANCE DATE:

02/21/08

James J. Fusaro

Director
New Jersey Division of Revenue

FORM-BRC(08-01)

This Certificate is NOT assignable or transferable. It must be conspicuously displayed at above address.

Certification **41854**

CERTIFICATE OF EMPLOYEE INFORMATION REPORT

INITIAL

This is to certify that the contractor listed below has submitted an Employee Information Report pursuant to N.J.A.C. 17:27-1.1 et. seq. and the State Treasurer has approved said report. This approval will remain in effect for the period of **15-MAY-2008** to **15-MAY-2015**

JOHNSON REALTY SERVICES, LLC
PO BOX 434 - 412 BOSTON BLVD
SEA GIRT NJ 08750

State Treasurer

THIS DOCUMENT IS PRINTED ON WATERMARKED PAPER WITH A MULTI-COLORED BACKGROUND AND MULTIPLE SECURITY FEATURES. PLEASE VERIFY AUTHENTICITY.

State Of New Jersey
New Jersey Office of the Attorney General
Division of Consumer Affairs

THIS IS TO CERTIFY THAT THE

Real Estate Appraisers Board

HAS CERTIFIED

PAUL R. JOHNSON
412 BOSTON BOULEVARD
SEA GIRT NJ 08750-2616

FOR PRACTICE IN NEW JERSEY AS A(N): Certified General Appraiser

12/21/2007 TO 12/31/2009
VALID

42RG00048500
LICENSE/REGISTRATION/CERTIFICATION #

Signature of Licensee/Registrant/Certificate Holder

Lawrence DeMaio
ACTING DIRECTOR

CITY OF LONG BRANCH
Request for Qualifications
For Professional Service Contract

Notice is hereby given that, in accordance with N.J.S.A. 19:44-20.5, et seq, through a fair and open process, the City of Long Branch, County of Monmouth, State of New Jersey, is requesting sealed proposals/submissions for the following Professional Service(s):

Notice #FO-016-08
Date of Receipt of Proposal: Monday, June 30, 2008, at 2 pm prevailing time
Proposal for: Appraisal Services Pool for 2008-2009

Proposal/Submission packages are available at the Purchasing Office, 344 Broadway, Long Branch, NJ during normal business hours, or by calling 732-571-5656, or fax request to 732-222-1516. Sample proposal/submission package is also on file for viewing in the Office of the City Clerk.

Proposal/Submissions will be publicly opened and read by the Purchasing Agent, or designated representative, at Long Branch Municipal Building, Council Caucus Room, Second Floor, 344 Broadway, Long Branch, NJ, on the date and time noted above. Firms unable to be present for the opening of proposals may mail proposal package to the attention of the City Clerk at the above address.

Professional service contractors are required to comply with the requirements of N.J.S.A. 10:5-31 et seq, and N.J.A.C. 17:27 et seq., PL 2004, c.19, and Long Branch Pay to Play Ordinance.

Successful contractors will be required to provide, prior to award of the contract, their Affirmative Action documentation, New Jersey Business Registration (Form NJ BUS REG). Successful contractor will also be required to comply with all terms imposed by NJ Elections Laws subject to campaign funding limits, and with Long Branch Pay to Play Ordinance.

Proposals will be reviewed and award of contract will be based upon the following criteria:

- Experience and reputation of the firm in the field of real estate appraisals in New Jersey, and more specifically, of the Monmouth County shore area.

- Qualifications of the individuals who will perform the required services, and their respective participation.

- Experience of the individuals as it relates to the particular expertise required to perform the contract.

- Ability of the firm to perform the services on a timely basis, including staffing and familiarity with the subject matter.

- Experience with or specific knowledge the City of Long Branch as it pertains to this contract.

- References

- Cost consideration, including, but not limited to fee schedule to be charged, fees paid by public entities of similar size and make-up, for comparable level of services, and if applicable, cost that would be incurred by the City to contract with a new firm (i.e. estimated cost for current firm to review and close out all files, and new firm to review and get up to speed on all open files).

Successful candidates chosen from respondents will be issued open-ended master contracts, and, during the contract year of July 1, 2008 through June 30, 2009, may be requested to provide appraisal services as may be required by the City. These contracts do not guarantee that any work will actually be awarded to any, or to all, of the successful candidates.

In the event that a member of the appraisal services pool, due to a conflict concern, should disqualify itself from consideration for a contract for a specific matter, that shall not adversely affect inclusion in the pool for consideration for future contracts during the contract year.

Contract assignments for specific appraisals will be awarded on an as needed basis to individual firms based upon the required expertise as it applies to the appraisal needed, ability to perform within the required timeframe, and evaluation of a proposals provided by the firm for each appraisal task. Contract assignments will be awarded upon recommendation of the Department of Administration, and each contract will be authorized by issuance of a purchase order. <u>No work may be authorized or services provided prior to the purchase order date</u>.

Request for Qualifications for Appraisal Services

The City of Long Branch will receive qualifications from appraisal firms to provide real estate appraisal services as may be required during the contract year. The services that may be required could include, but are not limited to, residential, commercial and/or hotel appraisals, including water or oceanfront properties, New Jersey Department of Environmental Protection Green Acres real estate appraisals, expert witness testimony regarding property appraisals relative to Monmouth County Board of Taxation Property Tax Appeals and/or New Jersey State Tax Court, or in any other legal proceedings, and expert testimony regarding property appraisals relative to property condemnations in Monmouth County Superior Court, Condemnation Commission, or in any other legal proceedings.

Qualifications submission must include all of the following:

1. Name, address, phone and fax number of firm. (if multiple office sites, list all, and indicate corporate office).

2. Biography or history of the firm; staffing (i.e. number of licensed appraisers, and other technical or clerical staff).

3. List of principals and/or partners.

4. List of appraisers that would be assigned to Long Branch matters, including a summary of their educations, qualifications, expertise and experience as it relates to the various areas of appraisal services the City may require. Indicate the approximate percentage of work each would be assigned. <u>The principals or partners assigned to Long Branch must have a minimum of 10 years experience in New Jersey real estate property appraisals.</u>

5. List of References from at least 2 municipalities for which the firm has provided similar services, including name, address, phone and contact information.

6. Provide prior experience, if any, the firm may have providing services to the City of Long Branch, and in what capacity.

7. List of municipalities currently under contract with the firm.

8. Provide a fee schedule by title for all firm members and employees. Indicate which fees would apply for attorneys and employees assigned to Long Branch matters.

9. Provide a schedule of any and all other fees routinely charged by the firm for during the course of providing services.

10. Copy of current Certificate of Insurance for Professional Liability coverage.

One original and four (4) photocopies of the submission package must be submitted to the City for consideration. In addition to the above required information, respondents must provide all documents indicated on the Submission Package Check List. Failure to provide all required documents may result in the proposal not being considered.

Additional Pay to Play Requirements

Contractors are advised of the responsibility to file an annual disclosure statement on political contributions with the New Jersey Election Enforcement Commission, pursuant to N.J.S.A. 19:44-20.13 (P.L. 2005, c, 271, s.3), if the contractor receives contracts in excess of $50,000 in the aggregate from public entities in a calendar year. It is the contractor's responsibility to determine if filing is necessary. The report is due March 30 of each year for reporting for prior year contracts. Additional information on this requirement is available from ELEC at 888-313-3532 or at www.elec.state.nj.us.

CITY OF LONG BRANCH
DOCUMENT SUBMISSION CHECKLIST

REQUIRED		READ, SIGNED & SUBMITTED
Yes	PROPOSAL AS REQUIRED IN RFQ	☑
Yes	STOCKHOLDER DISCLOSURE CERTIFICATION	☑
Yes	NON-COLLUSION AFFIDAVIT	☑
Yes	AFFIRMATIVE ACTION QUESTIONAIRE	☑

		REVIEWED
Yes	MANDATORY AFFIRMATIVE ACTION LANGUAGE	☑
Yes	AMERICANS WITH DISABLILITIES ACT OF 1990	☑
Yes	N. J. BUSINESS REGISTRATION LANGUAGE	☑
Yes	LONG BRANCH PAY TO PLAY ORDINANCE	☑

STOCKHOLDER DISCLOSURE CERTIFICATION

If bidder is a sole proprietorship, check here _____
And do not complete this statement.

The UNDERSIGNED, as bidder, in accordance with P.L. 1977, Chapter 33, of the State of New Jersey, declares and submits this Statement of Ownership.

Bidder is a Corporation (X) Partnership ( )

_X_ I certify that the list below contains the names and home addresses of all stockholders holding 10% or more of the issued and outstanding stock of the undersigned. (Use additional sheets in this format if necessary.)

____ I certify that no one stockholder owns 10% or more of the issued and outstanding stock of the undersigned.

Stockholder/Partner

Name Paul R. Johnson
Home Address 412 Boston Boulevard
Sea Girt, NJ 08750

Name John G. Sidway
Home Address 440 Drum Point Road
Brick, NJ 08723

Name _____
Home Address _____

Name _____
Home Address _____

Name _____
Home Address _____

Name _____
Home Address _____

Name _____
Home Address _____

Name _____
Home Address _____

(If a corporation or partnership is shown as an owner of 10% or more stock, you must attach a Stockholder Disclosure form for that corporation/partnership.)

THIS FORM MUST BE INCLUDED WITH BID SUBMISSION.

Subscribed and sworn
Before me this day
June 30th 2008
Cherie L. Sidway
Notary Public
My commission expires: Cherie L. Sidway 6/30/08

(Signature of Officer/Owner)

Partner
(Name and Title)

(CORPORATE SEAL)

Cherie L. Sidway
Notary Public State of N.J.
My Commission Expires, 10/02/2012

NON-COLLUSION AFFIDAVIT

STATE OF NEW JERSEY
COUNTY OF Monmouth

I, John G. Sidway residing in Brick
(name of municipality)

in the County of Ocean and State of New Jersey of full age,

being duly sworn according to law on my oath dispose and say that:

I, am Partner of the firm of Johnson Realty Services ,
(title or position) (name of firm)

the bidder making this Proposal for the bid proposal entitled Appraisal Services
(title of bid proposal)
Pool for 2008-2009 , and that I executed the said proposal with full authority to do so, that said bidder has not, directly or indirectly entered into any agreement, participated in any collusion, or otherwise taken any action in restraint of free, competitive bidding in connection with the above named project; and that all statements contained in said proposal and in this affidavit are true and correct, and made with full knowledge that the **City of Long Branch** relies upon the truth of the statements contained in said Proposal, and in the statements contained in this affidavit, in awarding the contract for the said project.

I further warrant that no person or selling agency has been employed or retained to solicit or secure such contract upon an agreement or understanding for a commission, percentage, brokerage, or contingent fee, except bona fide employees or bona fide established commercial or selling agencies maintained by Johnson Realty Services .
(name of firm)

(signature of affiant)

Subscribed and sworn to
before me this day

June 30th 2008

Cherie L. Sidway
(signature of notary)

Cherie L Sidway
6/30/08

My Commission expires:

Cherie L. Sidway
Notary Public State of N.J.
My Commission Expires, 10/02/2012

REQUIRED EVIDENCE
AFFIRMATIVE ACTION REGULATION
P.L. 1975, C. 127 (N.J.A.C. 17:27)

If awarded a contract, all procurement and service contractors will be required to comply with the requirements of P.L. 1975, c. 127, (N.J.A.C. 17:27). Within seven (7) days after receipt of the notification of intent to award the contract or receipt of the contract, whichever is sooner, the contractor should present one of the following to the Purchasing Agent.

1. **A photocopy of a valid letter from the U.S. Department of Labor that the contractor has an existing federally-approved or sanctioned Affirmative Action Plan (good for one year from the date of the letter).**

   OR

2. **A photocopy of approved Certificate of Employee Information Report from the State of New Jersey.**

   OR

3. **An Affirmative Action Employee Information Report (Form AA302).**

   OR

4. **All successful construction contractors must submit, within three days (3) of the signing of the contract, an Initial Project Manning Report (AA201) for any contract award that meets or exceeds the Public Agency bidding threshold (available upon request).**

NO FIRM MAY BE ISSUED A CONTRACT UNLESS IT COMPLIES WITH THE AFFIRMATIVE ACTION REGULATIONS OF P.L. 1975, C. 127.

The following questions must be answered by all bidders:

1. Do you have a federally-approved or sanctioned Affirmative Action Program?

___Yes __X__No If yes, please submit copy of such approval.

2. Do you have a Certificate of Employee Information Report Approval?

__X__Yes ___No If yes, please submit copy of such certificate.

The undersigned contractor certifies that he is aware of the commitment to comply with the requirements of P.L. 1975, c. 127, and agrees to furnish the required documentation pursuant to law.

COMPANY: Johnson Realty Services

SIGNATURE:

TITLE: Partner

NOTE: A CONTRACTOR'S BID MUST BE REJECTED AS NON-RESPONSIVE IF A CONTRACTOR FAILS TO COMPLY WITH REQUIREMENTS OF P.L.1975, C. 127, WITHIN THE REQUIRED TIME FRAME.

EXHIBIT A
MANDATORY EQUAL EMPLOYMENT OPPORTUNITY LANGUAGE
N.J.S.A. 10:5-31 et seq. (P.L. 1975, C. 127)
N.J.A.C. 17:27
GOODS, PROFESSIONAL SERVICE AND GENERAL SERVICE CONTRACTS

During the performance of this contract, the contractor agrees as follows:

The contractor or subcontractor, where applicable, will not discriminate against any employee or applicant for employment because of age, race, creed, color, national origin, ancestry, marital status, affectional or sexual orientation, gender identity or expression, disability nationality or sex. Except with respect to affectional or sexual orientation and gender identity or expression, the contractor will take affirmative action to ensure that such applicants are recruited and employed, and that employees are treated during employment, without regard to their age, race, creed, color, national origin, ancestry, marital status, affectional or sexual orientation, gender identity or expression, disability, nationality or sex. Such action shall include, but not be limited to the following: employment, upgrading, demotion, or transfer; recruitment or recruitment advertising; layoff or termination; rates of pay or other forms of compensation; and selection for training, including apprenticeship. The contractor agrees to post in conspicuous places, available to employees and applicants for employment, notices to be provided by the Public Agency Compliance Officer setting forth provisions of this nondiscrimination clause.

The contractor or subcontractor, where applicable will, in all solicitations or advertisements for employees placed by or on behalf of the contractor, state that all qualified applicants will receive consideration for employment without regard to age, race, creed, color, national origin, ancestry, marital status, affectional or sexual orientation, gender identity or expression, disability, nationality or sex.

The contractor or subcontractor, where applicable, will send to each labor union or representative or workers with which it has a collective bargaining agreement or other contract or understanding, a notice, to be provided by the agency contracting officer advising the labor union or workers' representative of the contractor's commitments under this act and shall post copies of the notice in conspicuous places available to employees and applicants for employment.

The contractor or subcontractor, where applicable, agrees to comply with any regulations promulgated by the Treasurer pursuant to N.J.S.A. 10:5-31 et seq., as amended and supplemented from time to time and the Americans with Disabilities Act.

The contractor or subcontractor agrees to make good faith efforts to employ minority and women workers consistent with the applicable county employment goals established in accordance with N.J.A.C. 17:27-5.2, or a binding determination of the applicable county employment goals determined by the Division, pursuant to N.J.A.C. 17:27-5.2.

The contractor or subcontractor agrees to inform in writing its appropriate recruitment agencies including, but not limited to, employment agencies, placement bureaus, colleges, universities, labor unions, that it does not discriminate on the basis of age, creed, color, national origin, ancestry, marital status, affectional or sexual orientation, gender identity or expression, disability, nationality or sex, and that it will discontinue the use of any recruitment agency which engages in direct or indirect discriminatory practices.

The contractor or subcontractor agrees to revise any of its testing procedures, if necessary, to assure that all personnel testing conforms with the principles of job-related testing, as established by the statutes and court decisions of the State of New Jersey and as established by applicable Federal law and applicable federal court decisions.

In conforming with the applicable employment goals, the contractor or subcontractor agrees to review all procedures relating to transfer, upgrading, downgrading and layoff to ensure that all such actions are taken without regard to age, creed, color, national origin, ancestry, marital status, affectional or sexual orientation, gender identity or expression, disability, nationality or sex, consistent with the statutes and court decisions of the State of New Jersey, and applicable Federal law and applicable Federal court decisions.

The contractor shall submit to the public agency, after notification of award but prior to execution of a goods and services contract, one of the following three documents:

Letter of Federal Affirmative Action Plan Approval
Certificate of Employee Information Report
Employee Information Report Form AA302

The contractor and its subcontractors shall furnish such reports or other documents to the Div. of Contract Compliances & EEO as may be requested by the office from time to time in order to carry out the purposes of these regulations, and public agencies shall furnish such information as may be requested by the Div. of Contract Compliance & EEO for conducting a compliance investigation pursuant to **Subchapter 10 of the Administrative Code at N.J.A.C. 17:27.**

AMERICANS WITH DISABILITIES ACT OF 1990

Equal Opportunity for Individuals with Disability

The CONTRACTOR and the OWNER do hereby agree that the provisions of Title II of the American With Disabilities Act of 1990 (the "ACT") (42 U.S.C. S12101 et seq.), which prohibits discrimination on the basis of disability by public entities in all services, programs, and activities provided or made available by public entities, and the rules and regulations promulgated pursuant thereunto, are made a part of this contract. In providing any aid, benefit, or service on behalf of the OWNER pursuant to this contract, the CONTRACTOR agrees that the performance shall be in strict compliance with the Act. In the event that the Contractor, its agents, servants, employees, or subcontractors violate or are alleged to have violated the Act during the performance of this contract, the CONTRACTOR shall defend the OWNER in any action or administrative proceeding commenced pursuant to this Act. The Contractor shall indemnify, protect, and save harmless the OWNER, its agents, servants, and employees from and against any and all suits, claims, losses, demands, or damages, of whatever kind or nature arising out of or claimed to arise out of the alleged violation. The CONTRACTOR shall, at its own expense, appear, defend, and pay any and all charges for legal services and any and all costs and other expenses arising from such action or administrative proceeding or incurred in connection therewith. In any and all complaints brought pursuant to the OWNER grievance procedure, the CONTRACTOR agrees to abide by any decision of the OWNER which is rendered pursuant to said grievance procedure. If any action or administrative proceeding results in an award of damages against the OWNER or if the
OWNER incurs any expense to cure a violation of the ADA which has been brought pursuant to its grievance procedure, the CONTRACTOR shall satisfy and discharge the same at its own expense.

The OWNER shall, as soon as practicable after a claim has been made against it, give written notice thereof to the CONTRACTOR along with full and complete particulars of the claim. If any action or administrative proceedings is brought against the OWNER or any of its agents, servants, and employees, the OWNER shall expeditiously forward or have forwarded to the CONTRACTOR every demand, complaint, notice, summons, pleading, or other process received by the OWNER or its representatives.

It is expressly agreed and understood that any approval by the OWNER of the services provided by the CONTRACTOR pursuant to this contract will not relieve the CONTRACTOR of the obligation to comply with the Act and to defend, indemnify, protect, and save harmless the OWNER pursuant to this paragraph.

It is further agreed and understood that the OWNER assumes no obligation to indemnify or save harmless the CONTRACTOR, its agents, servants, employees and subcontractors for any claim which may arise out of their performance of this Agreement. Furthermore, the CONTRACTOR expressly understands and agrees that the provisions of this indemnification clause shall in no way limit the CONTRACTOR'S obligations assumed in this Agreement, nor shall they be construed to relieve the CONTRACTOR from any liability, nor preclude the OWNER from taking any other actions available to it under any other provisions of the Agreement or otherwise at law.

CONTRACT LANGUAGE FOR
BUSINESS REGISTRATION CERTIFICATE COMPLAINCE

For Procurement (Goods and Services) Contracts
(including Purchase Orders)

N.J.S.A. 52:32-44 imposes the following requirements on contractors and all subcontractors that **knowingly** provide goods or perform services for a contractor fulfilling this contract: 1) the contractor shall provide written notice to its subcontractors to submit proof of business registration to the contractor; 2) prior to receipt of final payment from the contracting agency, a contractor must submit to the contracting agency an accurate list of all subcontractors or attest that none was used; 3) during the term of this contract, the contractor and its affiliates shall collect and remit, and shall notify all subcontractors and their affiliates that they must collect and remit to the Director, New Jersey Division of Taxation, the use tax due pursuant to the Sales and Use Tax Act, (N.J.S.A. 54:32B-1 et seq.) on all sales of tangible personal property delivered into this State.

A contractor, subcontractor or supplier who fails to provide proof of business registration or provides false business registration information shall be liable to a penalty or $25 for each day of violation, not to exceed $50,000 for each business registration not properly provided or maintained under a contract with the contracting agency. Information of the law and its requirements is available by calling (609)292-9292.

For Construction Contracts

N.J.S.A. 52:32-44 imposes the following requirements on contractors and all subcontractors that **knowingly** provide goods or perform services for a contractor fulfilling this contract:

1) The contractor shall provide written notice to its subcontractors and suppliers to submit proof of business registration to the contractor;
2) Subcontractors through all tiers of a project must provide written notice to their subcontractors and suppliers to submit proof of business registration and subcontractors shall collect proofs of business registration and maintain them on file;
3) Prior to receipt of final payment from a contracting agency, a contractor must submit to the contracting agency an accurate list of all subcontractors and suppliers or attest that none was used; and,
4) During the term of this contract, the contractor and its affiliates shall collect and remit, and shall notify all subcontractors and their affiliates that they must collect and remit, to the Director, New Jersey Division of Taxation, the use tax due pursuant to the Sales and Use Tax Act, (N.J.S.A. 52:32B-1 et seq.) on all sales of tangible personal property delivered into this State.

A contractor, subcontractor or supplier who fails to provide proof of business registration or provides false business registration information shall be liable to a penalty or $25 for each day of violation, not to exceed $50,000 for each business registration not properly provided or maintained under a contract with the contracting agency. Information of the law and its requirements is available by calling (609)292-9292.

Long Branch, New Jersey
ORDINANCE NO. 18-05

AN ORDINANCE TO AMEND AND SUPPLEMENT ORDINANCE NO. 13-05, KNOWN AS "AN ORDINANCE REQUIRING PUBLIC CONTRATING REFORM, AND AMENDING AND SUPPLEMENTING THE 'REVISED GENERAL ORDINANCES OF THE CITY OF LONG BRANCH, NEW JERSEY' ACCORDINGLY," AS ADOPTED ON MAY 10, 2005.

WHEREAS, on May 10, 2005, the City of Long Branch adopted Ordinance No. 13-05, known as "An Ordinance Requiring Public Contracting Reform, and Amending and Supplementing the 'Revised General Ordinances of the City of Long Branch, New Jersey' Accordingly" (the "Ordinance"); and

WHEREAS, the Ordinance places certain limitations upon the annual amount(s) of contributions that professionals may make to the political campaigns of the local elected officials who are ultimately responsible for the award of discretionary no-bid contracts for municipal professional services; and

WHEREAS, the intention of the Ordinance is to ensure trust in the process of local government, if not the quality or cost of services received, and to minimize any perceptions or concerns on the part of the public that discretionary no-bid contracts for municipal professional services are being awarded to professionals as a reward for having made substantial political contributions, or that the award of such contracts was influenced, even to a minor degree, by the payment of such contributions; and

WHEREAS, it is hereby found and declared that the practice of "wheeling," whereby one political organization channels campaign donations to another political organization with the intention to conceal or misrepresent the source of the contribution, may be utilized as a loophole to circumvent the proscriptions contained within the Ordinance; and

WHEREAS, the City Council of the City of Long Branch, in a continuing effort to ensure the integrity of the award of public professional service contracts, has therefore determined that it would be in the best interests of the City, and its residents, to amend the Ordinance in an attempt to curb the practice known as "wheeling;" and

WHEREAS, the City Council of the City of Long Branch also wishes to take this opportunity to clarify the "arbitration" provision referenced in Section 3(c) thereof; and

WHEREAS, the City Council of the City of Long Branch finds that it is in the best interest of the City and its residents to require that a contribution of more

than fifty dollars ($50.00) received by a candidate be reported in the manner set forth by the laws and regulations of the State of New Jersey.

NOW, THEREFORE, BE AND IT IS HEREBY ORDAINED, that Ordinance No. 13-05, known as "An Ordinance Requiring Public Contracting Reform, and Amending and Supplementing the 'Revised General Ordinances of the City of Long Branch, New Jersey' Accordingly," which was adopted on May 10, 2005, is hereby amended and supplemented as follows:

SECTION 1

Prohibition on Awarding Professional Contracts to Certain Contributors

(a) The City of Long Branch shall not enter into an agreement for professional services with any individual and/or professional business entity if that individual or entity has solicited or made any contribution of money or pledge of a contribution including in-kind contributions, to a campaign of any City of Long Branch candidate for Council or Mayor, in excess of the threshold specified in subsection (d) of this Section within one calendar year immediately preceding the date of the contract or agreement unless cured pursuant to Section 3. The prohibition set forth in this Paragraph shall also apply to any solicitation or contribution of money or pledge of a contribution including in-kind contributions made during the applicable time period to any City of Long Branch or Monmouth County Party Committee, or to any political action committee (PAC) that is organized for the primary purpose of promoting or supporting City of Long Branch candidates for Council or Mayor, so long as the solicitation or contribution was made with the intention on the part of the contributor to conceal or misrepresent the source of the contribution.

(b) No professional business entity which enters into negotiations for, or agrees to, any contact or agreement with the municipality or any department or agency thereof or any of its independent authorities for the rendition of professional services shall knowingly solicit or make any contribution of money, or pledge of a contribution, including in-kind contributions, to any City of Long Branch candidate or holder of public office having ultimate responsibility for the award of the contract, in excess of the amount set forth herein. This Section is to include any and all professionals who provide political contributions to any candidate for an office whether or not that candidate is presently in office or seeks office. The prohibition set forth in this Paragraph shall also apply to any solicitation or contribution of money or pledge of a contribution including in-kind contributions to any City of Long Branch or Monmouth County Party Committee, or to any political action committee (PAC) that is organized for the primary purpose of promoting or supporting City of Long Branch candidates for Council or Mayor, so long as the solicitation or contribution was made with the intention on the part of the contributor to conceal or misrepresent the source of the contribution.

(c) For purpose of this ordinance, a "professional business entity" seeking a public contract means an individual including the individual's spouse, if

any, and any child living at home; person; firm; corporation, professional corporation; partnership; organization; or association. The definition of a business entity includes all principals who own ten percent (10%) or more of the equity in the corporation or business trust, partners, and officers in the aggregate employed by the entity as well as any subsidiaries directly controlled by the business entity.

(d) Any individual meeting the definition of "professional business entity" under this section may annually contribute a maximum of five hundred dollars ($500.00) per candidate for Mayor and/or Council Member on an annual basis whether or not that individual has a professional services contract in place or not to the maximum extent of three thousand dollars ($3,000) per annum per business entity. This section shall apply to any presently sitting Councilperson and/or the Mayor of the City of Long Branch and shall also apply to any individual who seeks to run for the office of Council person and/or Mayor of the City of Long Branch.

(i) Any individual that owns less than ten (10%) percent of a professional business entity which contracts with the City of Long Branch shall not be treated as a part of that entity.

(e) For purposes of this section, the office that is considered to have ultimate responsibility for the award of the contract shall be:

(1) The City of Long Branch, if the contract requires approval or appropriation from the Council.

(2) The Mayor of the City of Long Branch, if the contract requires approval of the Mayor, or if a public officer who is responsible for the award of a contract is appointed by the Mayor.

SECTION 2
Contributions Made Prior to Effective Date

No contribution of money or any other thing of value, including in-kind contributions, made by a professional business entity to any municipal candidate for Mayor or Council, or to any municipal or county party committee, or to any political action committee (PAC) that is organized for the primary purpose of promoting or supporting City of Long Branch candidates for Council or Mayor, shall be deemed a violation of this section, nor shall an agreement for property, good or services, of any kind whatsoever, be disqualified thereby, if that contribution was made by the professional business entity prior to the effective date of this section.

SECTION 3
Penalty

(a) All City of Long Branch professional service agreements shall provide that it shall be a breach of the terms of the government contract for a professional business entity as defined in Section 1(c) to violate Section 1(b) or to knowingly conceal or misrepresent contributions given or received, or to make or solicit contributions through intermediaries for the purpose of concealing or misrepresenting the source of the contribution.

(b) Any professional business entity as defined in Section 1(c) and (d) who knowingly fails to reveal a contribution made in violation of this Act, or who knowingly makes or solicits contributions through intermediaries for the purpose of concealing or misrepresenting the source of the contribution, shall be subjected to a fine in the sum of $2,500 so far as the first offense and for any second offense, shall be disqualified from eligibility for future City of Long Branch contracts for a period of four calendar years from the date of the violation.

(c) There shall be no breach of contract in the event a contribution is questioned and as a result of the questioning of the contribution the individual and/or business entity who makes the contribution requests that the contribution be returned by the campaign committee, the candidate or the political action committee to whom such contribution was made. In the event of any disputes as to whether or not a campaign contribution is proper the matter shall be submitted to arbitration before a retired Judge of the Superior Court of New Jersey.

SECTION 4
Reporting Requirements

Any contribution received by a candidate committee, joint candidates committee, or political committee, during an election fund report period of more than fifty dollars ($50.00) or aggregate contributions received by such a committee in an election from a contributor totaling more than fifty dollars ($50.00) during such a report period shall be reported by providing the information set forth in N.J.A.C. 19:25-10.2

SECTION 5
Severability

If any provision of this law, or the application of any such provision to any person or circumstances, shall be held invalid, the remainder of this law to the extent it can be given effect, or the application of such provision to persons or circumstances other than those to which it is held invalid, shall not be affected thereby, and to this extent the provisions of this law are severable.

SECTION 6
Effective Date

This Ordinance shall take effect immediately upon final passage and publication in accordance with the law.

SECTION 7
Repealer

All other Ordinance or parts of Ordinances inconsistent herewith are hereby repealed to the extent of such inconsistency.

Introduced: 6/14/05
Adopted: 6/28/05

CITY OF LONG BRANCH
DOCUMENT SUBMISSION CHECKLIST

REQUIRED		READ, SIGNED & SUBMITTED
Yes	PROPOSAL AS REQUIRED IN RFQ	☑
Yes	STOCKHOLDER DISCLOSURE CERTIFICATION	☑
Yes	NON-COLLUSION AFFIDAVIT	☑
Yes	AFFIRMATIVE ACTION QUESTIONAIRE	☑

		REVIEWED
Yes	MANDATORY AFFIRMATIVE ACTION LANGUAGE	☑
Yes	AMERICANS WITH DISABLILITIES ACT OF 1990	☑
Yes	N. J. BUSINESS REGISTRATION LANGUAGE	☑
Yes	LONG BRANCH PAY TO PLAY ORDINANCE	☑

STOCKHOLDER DISCLOSURE CERTIFICATION

If bidder is a sole proprietorship, check here _____
And do not complete this statement.

The UNDERSIGNED, as bidder, in accordance with P.L. 1977, Chapter 33, of the State of New Jersey, declares and submits this Statement of Ownership.

Bidder is a Corporation (x) Partnership ( )

_x_ I certify that the list below contains the names and home addresses of all stockholders holding 10% or more of the issued and outstanding stock of the undersigned. (Use additional sheets in this format if necessary.)

____ I certify that no one stockholder owns 10% or more of the issued and outstanding stock of the undersigned.

Stockholder/Partner

Name Paul R. Johnson
Home Address 412 Boston Boulevard
Sea Girt, NJ 08750

Name John G. Sidway
Home Address 440 Drum Point Road
Brick, NJ 08723

Name _____
Home Address _____

Name _____
Home Address _____

Name _____
Home Address _____

Name _____
Home Address _____

Name _____
Home Address _____

Name _____
Home Address _____

(If a corporation or partnership is shown as an owner of 10% or more stock, you must attach a Stockholder Disclosure form for that corporation/partnership.)

THIS FORM MUST BE INCLUDED WITH BID SUBMISSION.

Subscribed and sworn
Before me this day
June 30th 2008
Cherie L. Sidway
Notary Public
My commission expires: Cherie L. Sidway 10/30/08

Cherie L. Sidway
Notary Public State of N.J.
My Commission Expires, 10/02/2012

(Signature of Officer/Owner)

Partner
(Name and Title)

(CORPORATE SEAL)

NON-COLLUSION AFFIDAVIT

STATE OF NEW JERSEY
COUNTY OF Monmouth

I, John G. Sidway residing in Brick
(name of municipality)

in the County of Ocean and State of New Jersey of full age,

being duly sworn according to law on my oath dispose and say that:

I, am Partner of the firm of Johnson Realty Services,
(title or position) (name of firm)

the bidder making this Proposal for the bid proposal entitled Appraisal Services
(title of bid proposal)
Pool for 2008-2009, and that I executed the said proposal with full authority to do so, that said bidder has not, directly or indirectly entered into any agreement, participated in any collusion, or otherwise taken any action in restraint of free, competitive bidding in connection with the above named project; and that all statements contained in said proposal and in this affidavit are true and correct, and made with full knowledge that the **City of Long Branch** relies upon the truth of the statements contained in said Proposal, and in the statements contained in this affidavit, in awarding the contract for the said project.

I further warrant that no person or selling agency has been employed or retained to solicit or secure such contract upon an agreement or understanding for a commission, percentage, brokerage, or contingent fee, except bona fide employees or bona fide established commercial or selling agencies maintained by Johnson Realty Services.
(name of firm)

(signature of affiant)

Subscribed and sworn to
before me this day
June 30th 2008

Cherie L. Sidway
(signature of notary)

Cherie L Sidway

My Commission expires:

Cherie L. Sidway
Notary Public State of N.J.
My Commission Expires, 10/02/2012

REQUIRED EVIDENCE
AFFIRMATIVE ACTION REGULATION
P.L. 1975, C. 127 (N.J.A.C. 17:27)

If awarded a contract, all procurement and service contractors will be required to comply with the requirements of P.L. 1975, c. 127, (N.J.A.C. 17:27). Within seven (7) days after receipt of the notification of intent to award the contract or receipt of the contract, whichever is sooner, the contractor should present one of the following to the Purchasing Agent.

1. **A photocopy of a valid letter from the U.S. Department of Labor that the contractor has an existing federally-approved or sanctioned Affirmative Action Plan (good for one year from the date of the letter).**

   OR

2. **A photocopy of approved Certificate of Employee Information Report from the State of New Jersey.**

   OR

3. **An Affirmative Action Employee Information Report (Form AA302).**

   OR

4. **All successful construction contractors must submit, within three days (3) of the signing of the contract, an Initial Project Manning Report (AA201) for any contract award that meets or exceeds the Public Agency bidding threshold (available upon request).**

NO FIRM MAY BE ISSUED A CONTRACT UNLESS IT COMPLIES WITH THE AFFIRMATIVE ACTION REGULATIONS OF P.L. 1975, C. 127.

The following questions must be answered by all bidders:

1. **Do you have a federally-approved or sanctioned Affirmative Action Program?**

   ___Yes _X_No **If yes, please submit copy of such approval.**

2. **Do you have a Certificate of Employee Information Report Approval?**

   _X_Yes ___No **If yes, please submit copy of such certificate.**

The undersigned contractor certifies that he is aware of the commitment to comply with the requirements of P.L. 1975, c. 127, and agrees to furnish the required documentation pursuant to law.

COMPANY: Johnson Realty Services

SIGNATURE:

TITLE: Partner

NOTE: A CONTRACTOR'S BID MUST BE REJECTED AS NON-RESPONSIVE IF A CONTRACTOR FAILS TO COMPLY WITH REQUIREMENTS OF P.L.1975, C. 127, WITHIN THE REQUIRED TIME FRAME.

EXHIBIT A
MANDATORY EQUAL EMPLOYMENT OPPORTUNITY LANGUAGE
N.J.S.A. 10:5-31 et seq. (P.L. 1975, C. 127)
N.J.A.C. 17:27
GOODS, PROFESSIONAL SERVICE AND GENERAL SERVICE CONTRACTS

During the performance of this contract, the contractor agrees as follows:

The contractor or subcontractor, where applicable, will not discriminate against any employee or applicant for employment because of age, race, creed, color, national origin, ancestry, marital status, affectional or sexual orientation, gender identity or expression, disability nationality or sex. Except with respect to affectional or sexual orientation and gender identity or expression, the contractor will take affirmative action to ensure that such applicants are recruited and employed, and that employees are treated during employment, without regard to their age, race, creed, color, national origin, ancestry, marital status, affectional or sexual orientation, gender identity or expression, disability, nationality or sex. Such action shall include, but not be limited to the following: employment, upgrading, demotion, or transfer; recruitment or recruitment advertising; layoff or termination; rates of pay or other forms of compensation; and selection for training, including apprenticeship. The contractor agrees to post in conspicuous places, available to employees and applicants for employment, notices to be provided by the Public Agency Compliance Officer setting forth provisions of this nondiscrimination clause.

The contractor or subcontractor, where applicable will, in all solicitations or advertisements for employees placed by or on behalf of the contractor, state that all qualified applicants will receive consideration for employment without regard to age, race, creed, color, national origin, ancestry, marital status, affectional or sexual orientation, gender identity or expression, disability, nationality or sex.

The contractor or subcontractor, where applicable, will send to each labor union or representative or workers with which it has a collective bargaining agreement or other contract or understanding, a notice, to be provided by the agency contracting officer advising the labor union or workers' representative of the contractor's commitments under this act and shall post copies of the notice in conspicuous places available to employees and applicants for employment.

The contractor or subcontractor, where applicable, agrees to comply with any regulations promulgated by the Treasurer pursuant to N.J.S.A. 10:5-31 et seq., as amended and supplemented from time to time and the Americans with Disabilities Act.

The contractor or subcontractor agrees to make good faith efforts to employ minority and women workers consistent with the applicable county employment goals established in accordance with N.J.A.C. 17:27-5.2, or a binding determination of the applicable county employment goals determined by the Division, pursuant to N.J.A.C. 17:27-5.2.

The contractor or subcontractor agrees to inform in writing its appropriate recruitment agencies including, but not limited to, employment agencies, placement bureaus, colleges, universities, labor unions, that it does not discriminate on the basis of age, creed, color, national origin, ancestry, marital status, affectional or sexual orientation, gender identity or expression, disability, nationality or sex, and that it will discontinue the use of any recruitment agency which engages in direct or indirect discriminatory practices.

The contractor or subcontractor agrees to revise any of its testing procedures, if necessary, to assure that all personnel testing conforms with the principles of job-related testing, as established by the statutes and court decisions of the State of New Jersey and as established by applicable Federal law and applicable federal court decisions.

In conforming with the applicable employment goals, the contractor or subcontractor agrees to review all procedures relating to transfer, upgrading, downgrading and layoff to ensure that all such actions are taken without regard to age, creed, color, national origin, ancestry, marital status, affectional or sexual orientation, gender identity or expression, disability, nationality or sex, consistent with the statutes and court decisions of the State of New Jersey, and applicable Federal law and applicable Federal court decisions.

The contractor shall submit to the public agency, after notification of award but prior to execution of a goods and services contract, one of the following three documents:

Letter of Federal Affirmative Action Plan Approval
Certificate of Employee Information Report
Employee Information Report Form AA302

The contractor and its subcontractors shall furnish such reports or other documents to the Div. of Contract Compliances & EEO as may be requested by the office from time to time in order to carry out the purposes of these regulations, and public agencies shall furnish such information as may be requested by the Div. of Contract Compliance & EEO for conducting a compliance investigation pursuant to **Subchapter 10 of the Administrative Code at N.J.A.C. 17:27.**

AMERICANS WITH DISABILITIES ACT OF 1990

Equal Opportunity for Individuals with Disability

The CONTRACTOR and the OWNER do hereby agree that the provisions of Title II of the American With Disabilities Act of 1990 (the "ACT") (42 U.S.C. S12101 et seq.), which prohibits discrimination on the basis of disability by public entities in all services, programs, and activities provided or made available by public entities, and the rules and regulations promulgated pursuant thereunto, are made a part of this contract. In providing any aid, benefit, or service on behalf of the OWNER pursuant to this contract, the CONTRACTOR agrees that the performance shall be in strict compliance with the Act. In the event that the Contractor, its agents, servants, employees, or subcontractors violate or are alleged to have violated the Act during the performance of this contract, the CONTRACTOR shall defend the OWNER in any action or administrative proceeding commenced pursuant to this Act. The Contractor shall indemnify, protect, and save harmless the OWNER, its agents, servants, and employees from and against any and all suits, claims, losses, demands, or damages, of whatever kind or nature arising out of or claimed to arise out of the alleged violation. The CONTRACTOR shall, at its own expense, appear, defend, and pay any and all charges for legal services and any and all costs and other expenses arising from such action or administrative proceeding or incurred in connection therewith. In any and all complaints brought pursuant to the OWNER grievance procedure, the CONTRACTOR agrees to abide by any decision of the OWNER which is rendered pursuant to said grievance procedure. If any action or administrative proceeding results in an award of damages against the OWNER or if the
OWNER incurs any expense to cure a violation of the ADA which has been brought pursuant to its grievance procedure, the CONTRACTOR shall satisfy and discharge the same at its own expense.

The OWNER shall, as soon as practicable after a claim has been made against it, give written notice thereof to the CONTRACTOR along with full and complete particulars of the claim. If any action or administrative proceedings is brought against the OWNER or any of its agents, servants, and employees, the OWNER shall expeditiously forward or have forwarded to the CONTRACTOR every demand, complaint, notice, summons, pleading, or other process received by the OWNER or its representatives.

It is expressly agreed and understood that any approval by the OWNER of the services provided by the CONTRACTOR pursuant to this contract will not relieve the CONTRACTOR of the obligation to comply with the Act and to defend, indemnify, protect, and save harmless the OWNER pursuant to this paragraph.

It is further agreed and understood that the OWNER assumes no obligation to indemnify or save harmless the CONTRACTOR, its agents, servants, employees and subcontractors for any claim which may arise out of their performance of this Agreement. Furthermore, the CONTRACTOR expressly understands and agrees that the provisions of this indemnification clause shall in no way limit the CONTRACTOR'S obligations assumed in this Agreement, nor shall they be construed to relieve the CONTRACTOR from any liability, nor preclude the OWNER from taking any other actions available to it under any other provisions of the Agreement or otherwise at law.

CONTRACT LANGUAGE FOR
BUSINESS REGISTRATION CERTIFICATE COMPLAINCE

For Procurement (Goods and Services) Contracts
(including Purchase Orders)

N.J.S.A. 52:32-44 imposes the following requirements on contractors and all subcontractors that **knowingly** provide goods or perform services for a contractor fulfilling this contract: 1) the contractor shall provide written notice to its subcontractors to submit proof of business registration to the contractor; 2) prior to receipt of final payment from the contracting agency, a contractor must submit to the contracting agency an accurate list of all subcontractors or attest that none was used; 3) during the term of this contract, the contractor and its affiliates shall collect and remit, and shall notify all subcontractors and their affiliates that they must collect and remit to the Director, New Jersey Division of Taxation, the use tax due pursuant to the Sales and Use Tax Act, (N.J.S.A. 54:32B-1 et seq.) on all sales of tangible personal property delivered into this State.

A contractor, subcontractor or supplier who fails to provide proof of business registration or provides false business registration information shall be liable to a penalty or $25 for each day of violation, not to exceed $50,000 for each business registration not properly provided or maintained under a contract with the contracting agency. Information of the law and its requirements is available by calling (609)292-9292.

For Construction Contracts

N.J.S.A. 52:32-44 imposes the following requirements on contractors and all subcontractors that **knowingly** provide goods or perform services for a contractor fulfilling this contract:

1) The contractor shall provide written notice to its subcontractors and suppliers to submit proof of business registration to the contractor;
2) Subcontractors through all tiers of a project must provide written notice to their subcontractors and suppliers to submit proof of business registration and subcontractors shall collect proofs of business registration and maintain them on file;
3) Prior to receipt of final payment from a contracting agency, a contractor must submit to the contracting agency an accurate list of all subcontractors and suppliers or attest that none was used; and,
4) During the term of this contract, the contractor and its affiliates shall collect and remit, and shall notify all subcontractors and their affiliates that they must collect and remit, to the Director, New Jersey Division of Taxation, the use tax due pursuant to the Sales and Use Tax Act, (N.J.S.A. 52:32B-1 et seq.) on all sales of tangible personal property delivered into this State.

A contractor, subcontractor or supplier who fails to provide proof of business registration or provides false business registration information shall be liable to a penalty or $25 for each day of violation, not to exceed $50,000 for each business registration not properly provided or maintained under a contract with the contracting agency. Information of the law and its requirements is available by calling (609)292-9292.

Long Branch, New Jersey
ORDINANCE NO. 18-05

AN ORDINANCE TO AMEND AND SUPPLEMENT ORDINANCE NO. 13-05, KNOWN AS "AN ORDINANCE REQUIRING PUBLIC CONTRATING REFORM, AND AMENDING AND SUPPLEMENTING THE 'REVISED GENERAL ORDINANCES OF THE CITY OF LONG BRANCH, NEW JERSEY' ACCORDINGLY," AS ADOPTED ON MAY 10, 2005.

WHEREAS, on May 10, 2005, the City of Long Branch adopted Ordinance No. 13-05, known as "An Ordinance Requiring Public Contracting Reform, and Amending and Supplementing the 'Revised General Ordinances of the City of Long Branch, New Jersey' Accordingly" (the "Ordinance"); and

WHEREAS, the Ordinance places certain limitations upon the annual amount(s) of contributions that professionals may make to the political campaigns of the local elected officials who are ultimately responsible for the award of discretionary no-bid contracts for municipal professional services; and

WHEREAS, the intention of the Ordinance is to ensure trust in the process of local government, if not the quality or cost of services received, and to minimize any perceptions or concerns on the part of the public that discretionary no-bid contracts for municipal professional services are being awarded to professionals as a reward for having made substantial political contributions, or that the award of such contracts was influenced, even to a minor degree, by the payment of such contributions; and

WHEREAS, it is hereby found and declared that the practice of "wheeling," whereby one political organization channels campaign donations to another political organization with the intention to conceal or misrepresent the source of the contribution, may be utilized as a loophole to circumvent the proscriptions contained within the Ordinance; and

WHEREAS, the City Council of the City of Long Branch, in a continuing effort to ensure the integrity of the award of public professional service contracts, has therefore determined that it would be in the best interests of the City, and its residents, to amend the Ordinance in an attempt to curb the practice known as "wheeling;" and

WHEREAS, the City Council of the City of Long Branch also wishes to take this opportunity to clarify the "arbitration" provision referenced in Section 3(c) thereof; and

WHEREAS, the City Council of the City of Long Branch finds that it is in the best interest of the City and its residents to require that a contribution of more

than fifty dollars ($50.00) received by a candidate be reported in the manner set forth by the laws and regulations of the State of New Jersey.

NOW, THEREFORE, BE AND IT IS HEREBY ORDAINED, that Ordinance No. 13-05, known as "An Ordinance Requiring Public Contracting Reform, and Amending and Supplementing the 'Revised General Ordinances of the City of Long Branch, New Jersey' Accordingly," which was adopted on May 10, 2005, is hereby amended and supplemented as follows:

SECTION 1

Prohibition on Awarding Professional Contracts to Certain Contributors

(a) The City of Long Branch shall not enter into an agreement for professional services with any individual and/or professional business entity if that individual or entity has solicited or made any contribution of money or pledge of a contribution including in-kind contributions, to a campaign of any City of Long Branch candidate for Council or Mayor, in excess of the threshold specified in subsection (d) of this Section within one calendar year immediately preceding the date of the contract or agreement unless cured pursuant to Section 3. The prohibition set forth in this Paragraph shall also apply to any solicitation or contribution of money or pledge of a contribution including in-kind contributions made during the applicable time period to any City of Long Branch or Monmouth County Party Committee, or to any political action committee (PAC) that is organized for the primary purpose of promoting or supporting City of Long Branch candidates for Council or Mayor, so long as the solicitation or contribution was made with the intention on the part of the contributor to conceal or misrepresent the source of the contribution.

(b) No professional business entity which enters into negotiations for, or agrees to, any contact or agreement with the municipality or any department or agency thereof or any of its independent authorities for the rendition of professional services shall knowingly solicit or make any contribution of money, or pledge of a contribution, including in-kind contributions, to any City of Long Branch candidate or holder of public office having ultimate responsibility for the award of the contract, in excess of the amount set forth herein. This Section is to include any and all professionals who provide political contributions to any candidate for an office whether or not that candidate is presently in office or seeks office. The prohibition set forth in this Paragraph shall also apply to any solicitation or contribution of money or pledge of a contribution including in-kind contributions to any City of Long Branch or Monmouth County Party Committee, or to any political action committee (PAC) that is organized for the primary purpose of promoting or supporting City of Long Branch candidates for Council or Mayor, so long as the solicitation or contribution was made with the intention on the part of the contributor to conceal or misrepresent the source of the contribution.

(c) For purpose of this ordinance, a "professional business entity" seeking a public contract means an individual including the individual's spouse, if

any, and any child living at home; person; firm; corporation, professional corporation; partnership; organization; or association. The definition of a business entity includes all principals who own ten percent (10%) or more of the equity in the corporation or business trust, partners, and officers in the aggregate employed by the entity as well as any subsidiaries directly controlled by the business entity.

(d) Any individual meeting the definition of "professional business entity" under this section may annually contribute a maximum of five hundred dollars ($500.00) per candidate for Mayor and/or Council Member on an annual basis whether or not that individual has a professional services contract in place or not to the maximum extent of three thousand dollars ($3,000) per annum per business entity. This section shall apply to any presently sitting Councilperson and/or the Mayor of the City of Long Branch and shall also apply to any individual who seeks to run for the office of Council person and/or Mayor of the City of Long Branch.

(i) Any individual that owns less than ten (10%) percent of a professional business entity which contracts with the City of Long Branch shall not be treated as a part of that entity.

(e) For purposes of this section, the office that is considered to have ultimate responsibility for the award of the contract shall be:

(1) The City of Long Branch, if the contract requires approval or appropriation from the Council.

(2) The Mayor of the City of Long Branch, if the contract requires approval of the Mayor, or if a public officer who is responsible for the award of a contract is appointed by the Mayor.

SECTION 2
Contributions Made Prior to Effective Date

No contribution of money or any other thing of value, including in-kind contributions, made by a professional business entity to any municipal candidate for Mayor or Council, or to any municipal or county party committee, or to any political action committee (PAC) that is organized for the primary purpose of promoting or supporting City of Long Branch candidates for Council or Mayor, shall be deemed a violation of this section, nor shall an agreement for property, good or services, of any kind whatsoever, be disqualified thereby, if that contribution was made by the professional business entity prior to the effective date of this section.

SECTION 3
Penalty

(a) All City of Long Branch professional service agreements shall provide that it shall be a breach of the terms of the government contract for a professional business entity as defined in Section 1(c) to violate Section 1(b) or to knowingly conceal or misrepresent contributions given or received, or to make or solicit contributions through intermediaries for the purpose of concealing or misrepresenting the source of the contribution.

(b) Any professional business entity as defined in Section 1(c) and (d) who knowingly fails to reveal a contribution made in violation of this Act, or who knowingly makes or solicits contributions through intermediaries for the purpose of concealing or misrepresenting the source of the contribution, shall be subjected to a fine in the sum of $2,500 so far as the first offense and for any second offense, shall be disqualified from eligibility for future City of Long Branch contracts for a period of four calendar years from the date of the violation.

(c) There shall be no breach of contract in the event a contribution is questioned and as a result of the questioning of the contribution the individual and/or business entity who makes the contribution requests that the contribution be returned by the campaign committee, the candidate or the political action committee to whom such contribution was made. In the event of any disputes as to whether or not a campaign contribution is proper the matter shall be submitted to arbitration before a retired Judge of the Superior Court of New Jersey.

SECTION 4
Reporting Requirements

Any contribution received by a candidate committee, joint candidates committee, or political committee, during an election fund report period of more than fifty dollars ($50.00) or aggregate contributions received by such a committee in an election from a contributor totaling more than fifty dollars ($50.00) during such a report period shall be reported by providing the information set forth in N.J.A.C. 19:25-10.2

SECTION 5
Severability

If any provision of this law, or the application of any such provision to any person or circumstances, shall be held invalid, the remainder of this law to the extent it can be given effect, or the application of such provision to persons or circumstances other than those to which it is held invalid, shall not be affected thereby, and to this extent the provisions of this law are severable.

SECTION 6
Effective Date

This Ordinance shall take effect immediately upon final passage and publication in accordance with the law.

SECTION 7
Repealer

All other Ordinance or parts of Ordinances inconsistent herewith are hereby repealed to the extent of such inconsistency.

Introduced: 6/14/05
Adopted: 6/28/05

CITY OF LONG BRANCH, MUNICIPAL BUILDING, 344 BROADWAY, LONG BRANCH, N.J. 07740 (732) 571-5645

Howard H. Woolley, Jr
Business Administrator

TO: Council Members

FROM: Howard H. Woolley, Jr.
Business Administrator

RE: Contract for Appraisal Services Pool

DATE: July 2, 2008

After examining the proposals submitted to the City of Long Branch for Appraisal Services, it is the recommendation of the Mayor and Business Administrator to award a contract for appraisal services for the term of July 1, 2008 through June 30, 2009 to:

Gagliano Appraisal, LLC
McGuire Associates, LLC
Johnson Realty Services

Based upon prior history, the City of Long Branch has determined that the above referenced appraisal companies have the experience, expertise and resources to provide the services required by the City of Long Branch.

HHW:gb

R# 226-08

RESOLUTION REQUESTING CHANGE IN TITLE, TEXT, OR AMOUNT OF APPROPRIATION PURSUANT TO NJS 40A:4-85

WHEREAS, NJS 40A:4-85 provides that the Director of the Division of Local government Services may, at the request of, or with the consent of, the governing body of any county or municipality, make such correction of the title, text, or amount of any appropriation appearing in the budget as may be necessary to make said item of appropriation available for the purpose or purposes required for the needs of any county of municipality,

NOW, THEREFORE, BE IT RESOLVED that in accordance with the provisions of NJS 40A:4-85, the Council of the City of Long Branch, County of Monmouth, hereby requests the Director of the Division of Local Government Services to make the following correction to the 2008 budget of the City:

	From	To	Change
Office of the City Attorney			
Salaries and Wages	$30,000.00	$15,000.00	($15,000.00)
Miscellaneous Other Expenses (Retainer)	0	$15,000.00	$15,000.00
Planning Board			
Salaries and Wages	$3,600.00	$1,800.00	($1,800.00)
Miscellaneous Other Expenses (Retainer)	0	$1,800.00	$1,800.00
Zoning Board of Adjustment			
Salaries and Wages	$6,000.00	$3,000.00	($3,000.00)
Miscellaneous Other Expenses (Retainer)	0	$3,000.00	$3,000.00

BE IT FURTHER RESOLVED that the foregoing correction is, in the opinion of the Governing body, warranted and authorized by the statute referred to above, and is necessary for the orderly operation of City of Long Branch for the reasons set forth:

The employment of the City Attorney, and Board attorneys for the Planning and Zoning Boards have been terminated effective June 30, 2007 with each now receiving a retainer in the same annual amount as their previous salaries.

Adopted this 8th day of July 2008 and certified as a true copy of the original

_____

R# 227-08

RESOLUTION APPROVING VARIOUS LIQUOR LICENSES FOR THE 2008/2009 LICENSING TERM

WHEREAS, the Director of Public Safety, the Director of Health, the Director of Building & Development, the Fire Marshall and the Chief Code Enforcement Officer have recommended the approval of the following 2008/2009 liquor licenses:

POR DO SOL	1325-32-021-013
LONG BRANCH ELKS LODGE	1325-31-065-001

NOW, THEREFORE, BE IT RESOLVED, by the City Council of the City of Long Branch that they hereby approve the above listed liquor license renewals for the 2008/2009 licensing term.

MOVED:
SECONDED:

AYES:
NAYS:
ABSENT:
ABSTAIN:

POR DO SOL	276 BROADWAY

CUSTODIO, INC.

OWNERS:

JOHN CUSTODIO
MARIA CUSTODIO

STATE LICENSE #:	1325-32-021-013
TRANSFERRED ON:	APRIL 26, 2005
STATUS:	ACTIVE
PHONE #:	

ELKS LODGE	150 GARFIELD AVENUE

STATE LICENSE #: 1325-31-065-001

STATUS: ACTIVE
SECRETARY – ROSE FLANNIGAN
PHONE #:

R# 228-08

RESOLUTION
APPROVAL PAYMENT OF BILLS

WHEREAS, the City Council of the City of Long Branch have examined the bills and the vouchers therefore that are contained on the attached list.

NOW THEREFORE BE IT RESOLVED, by the City Council of the City of Long Branch that the payment of bills set forth on the attached list are hereby approved.

MOVED:

SECONDED:

AYES:

NAYES:

ABSENT:

ABSTAIN:

I hereby certify the foregoing to be a true copy of a resolution adopted by the City Council at their Regular meeting held on _____.

IN WITNESS WHEREOF, I have hereunto set my hand and affixed the official seal of the City of Long Branch, Monmouth County, New Jersey this _____ day of _____, 2008

_____
Irene A. Joline, RMC
City Clerk

PUBLIC NOTICE

Notice is hereby given that the following bills will be submitted for payment approval as of July 8, 2008. The original bills are on file in the Office of the Director of Finance of the City of Long Branch between the hours of 8:30 and 4:30 P.M. Monday through Friday.

A T & T	Utilities - Telephone - 6/9/2008 - Various Locations	*	35.30	
A.R. Communications	Repair Knox Box - Vehicle #25-30 - Fire Prevention		70.00	
Allied Diesel Service Corp.	Misc. Parts - Sanitation #10 - DPW		89.95	
Allied Oil Co.	Diesel Fuel & Underground Storage Tank Tax - 6/10/2008 - DPW		16,021.63	
AMANJ Education Fund	Registration - Annual Conference - 6/1-6/4/2008 - William Fitzpatrick - Tax Assessor		245.00	
American Hose & Hydraulics	Misc. Automotive Parts - PW #103 - DPW		950.00	
American Planning Assoc.	Zoning Practice Publication Subscription - M. Bernich - Planning/Zoning		75.00	
Apruzzese, McDermott, Mastro & Murphy	Legal Services Rendered - Labor Attorney - General Matters - May 2008		9,463.53	Pymt #5
Atlantic Plumbing Supply	Various Materials for Comfort Stations - DPW		303.82	
Authority Entertainment	Musical Performance - The Philadelphia Funk Authority - 6/29/2008 - Administration	*	1,250.00	
Avtech	Software Maintenance Renewal for Network Monitoring - 6/30/08-6/30/09 - IT-Admin.		75.00	
Barry Stein	Cell Phone Allowance - May & June 2008 - Community Dev.		80.00	
Bette White Fernandez	Tap Dance Instruction - 6/13 & 6/20/2008 - Senior Affairs		62.00	
Birdsall Engineering	Engineering Services Rendered - General Matters - May 2008	*	5,787.00	Pymt #5
Birdsall Engineering	Engineering Services Rendered - General Matters - June 2007	*	130.39	
Birdsall Engineering	Engineering Services Rendered - General Matters - July / November 2007	*	42,073.28	Pymt #1-2
Bob's Uniform Shop	Uniforms for Inspectors - Fire Prevention		766.10	
Brothers Management Associates	Musical Performance - Rag Doll - 7/1/2008 - Administration	*	3,000.00	
Bullet Lock & Safe	Misc. Keys/Locks - May 2008 - Various Depts.		335.50	
Carl F. Jennings	Cell Phone Allowance - April / June 2008 - Recreation Dept.		120.00	
CDWG	Misc. Computer Supplies - IT-Administration / Police Dept.		497.00	
Charles E. Lambert	Musical Performance - The Chuck Lambert Band - 6/22/2008 - Administration	*	650.00	
Cherry Valley Tractor Sales	Misc. Parts - PW #57 - DPW		289.84	
City of Long Branch Clearing Account	Reimburse Clearing Account	*	12,197.95	
City of Long Branch Clearing Account	Reimburse Clearing Account	*	404,362.51	
City of Long Branch Clearing Account	Reimburse Clearing Account	*	75,334.48	
City of Long Branch Clearing Account	Reimburse Clearing Account	*	878,552.38	
City of Long Branch Payroll Agency	Payroll Dated 6/27/2008	*	37,112.06	
City of Long Branch Payroll Agency	Payroll Dated 6/27/2008	*	841,531.32	

* DENOTES PREPAY

** SUBJECT TO COMPLETION OF PAYMENT PACKAGE

Clayton Block	Drainage Materials - May 2008 & Work Gloves for Beach Cleaners - DPW / Recreation Dept.		107.38
CMF	Copier Paper - Purchasing Dept.		1,300.07
Coast Hardware	Misc. Hardware - May 2008 - Various Depts.		1,111.92
Comcast Online	Internet Provider Services - 6/16-7/15/2008 - IT-Administration	*	169.95
Conte's Car Wash	Motorcycle / Car Wash Contract - June 2008		1,188.50
Continental Fire & Safety	Misc. Equipment - Fire Dept.		3,284.00
Cost Cutters	Chairs for Car Shows - Administration	*	79.92
Custom Bandag	Re-Cap Tires - DPW		2,287.20
Diamond Triumph Auto Glass	Install Windshield - PW #8 - DPW		195.00
Edmunds & Assoc.	Set Up for New Server - Tax Collector's Office		1,595.00
Edwards Tire	Tires - Fire Dept.		3,217.70
F & C Automotive Supply	Misc. Automotive Parts - Various Vehicles - DPW		255.37
Fax Express	Toner for Fax Machine - City Clerk / Purchasing Dept.		449.99
First Looks Business Signatures	Professional Services Rendered - Printing Of Materials - Tri-City Tour - 6/6-6/8/08 - UEZ	*	6,650.00
Ford Motor Credit	(9) Lease / Purchase Vehicles - August 2008		5,717.24
Ford Motor Credit	(2) Lease/Purchase Vehicles - June 2008	*	1,319.86
Ford Motor Credit	Document Fees for (2) Crown Vics	*	350.00
Foremost Promotions	Promotional Items for Oceanfest Giveaways - Police Dept.		89.31
Funny Factory	Entertainment for Fun Fest - 6/8/2008 - Recreation Dept.	*	3,500.00
G. Neil Direct Mail	2009 Attendance Controller Cards - Personnel Dept.		321.79
Gannett Satellite Information Network	Legal Ads - May 2008 - City Clerk		878.36
General Service Admin./G.S.A. Fleet Mgmnt.	(2) Ford Crown Vics - Police Dept.		14,000.00
Gerald Carroll	Reimbursement for Purchase of Nova Backup Server Upgrade - IT-Administration		99.95
Harley Davidson of Long Branch	Service PD Motorcycle #1 - DPW		283.96
Hewlett Packard Gov't/Education Sales	Printer & Cartridge for Booking Room - Police Dept.		1,129.00
Hilsen Termite & Pest Control	Integrated Pest Control - June 2008 - Health Dept.		345.00
Home Depot Credit Services	Various Building Materials - Various Depts.		597.97
Hunter Jersey Peterbilt	Misc. Parts - PW #250 - DPW		443.86
IBM	Software Maintenance & Support - Police Dept.		8,968.00
J & N Enterprises	Equipment Maintenance - Fire Dept.		557.14
Jacob L. Jones	Cell Phone Allowance - April / June 2008 - Community Dev.		120.00
Joann Fabrics & Crafts	Supplies for Luncheon - 7/3/2008 - Senior Affairs	*	107.43
John Guire Co.	Misc. Tools / Equipment - May 2008 - DPW		315.94
Johnny On The Spot	(5) Port-A-John's - Various Locations - May & June 2008 - Recreation Dept.		684.70
John's Auto & Truck Repair	Alignment - PD #107 & Towing - Various Vehicles - DPW		150.00
Juan E. Vasquez	Reimbursement for Expenses Incurred - Homicide Invest. School - 6/2-6/13/08 - Police Dept.		225.78
Kahlil Carmichael	Cardio Sculpt Instruction - 6/13 & 6/20/2008 - Senior Affairs		100.00
Kepwel Water	Monthly Cooler Rental - May 2008 - Administration		14.00

* DENOTES PREPAY

** SUBJECT TO COMPLETION OF PAYMENT PACKAGE

K-Mart	Coolers & Supply Bins for Activities/College Tour - Recreation Dept.		230.92	
Knox Co.	Repair Knox Box - Fire Prevention		38.00	
Lakewood Auto Supply	Misc. Filters - April 2008 - DPW		555.70	
Lanigan Assoc.	Misc. Supplies - Police Dept. / Health Dept.		966.70	
Lee Battery Service	Battery for Fire #25-89 - Fire Dept.		60.95	
Leonard Molinari / Happy Trails Inc.	Musical Performance - Yasgurs Farm Band - 6/26/2008 - Administration	*	2,000.00	
LHR Technologies	Carving Machine for Sign Making for Parks & Public Property - DPW		2,603.97	
Lowe's Credit Services	Various Building Materials - DPW		754.33	
Maaco Auto Painting & Bodyworks Center	Paint PW Vehicle #8 - DPW		425.00	
Magloclen	Annual User Fee - 7/1/08-6/30/09 - Police Dept.		400.00	
Mazza & Sons	Disposal of Bulky Waste - May 2008		13,671.99	Pymt #3
Michael Martin	Reimbursement for Memberships/Licenses - Comptroller	*	215.00	
Michael Rafferty	Videography & Editing Services - Takanassee Lake Rally - Cable Commission		1,000.00	
Monmouth Cnty Treasurer - Finance Dept.	Tipping Fees & Various Taxes - 5/16-5/31/2008 - DPW		45,487.03	
Monmouth University	Project Prom for Shore Regional High School - 5/30/2008 - Coastal Monmouth Alliance		850.00	
Motor Vehicle Services	Motor Vehicle Title - Police Dept.	*	20.00	
Motor Vehicle Services	Motor Vehicle Title - Health Dept.	*	20.00	
Motor Vehicle Services	Motor Vehicle Title - Health Dept.	*	20.00	
Motor Vehicle Services	Motor Vehicle Title - Police Dept.	*	20.00	
Motor Vehicle Services	Motor Vehicle Title - Police Dept.	*	20.00	
Motor Vehicle Services	Motor Vehicle Title - Police Dept.	*	20.00	
National Imprint Corp.	Promotional Items for Youth Services Giveaways - Police Dept.		611.52	
New Jersey American Water	Utilities - Water - 4/25-6/6/2008 - Various Locations	*	2,114.41	
New Jersey State Police - Major Crime Unit	Registration - Homicide Investigation Conference - 6/23-6/27/08 - P.O. Cruz - Police Dept.		495.00	
NJ Legislative Manual	2008 NJ Legislative Manual - Howard H. Woolley Jr. - Administration		68.00	
Oceanside Service	Service Call - Air Conditioning - DPW / Police Dept.		474.00	
Perry's Trophy	Plaque - Honoring Car Show Sponsors - Administration		29.00	
Peters-Todd's	Tree Removal at Monmouth Place - DPW		1,800.00	
Petroleum Traders Corp.	Unleaded Gasoline & Underground Storage Tank Tax - 6/9/2008 - DPW		30,885.60	
Pitney Bowes	Meter Rental & Equipment Maintenance - 4/1-6/30/08 & 4/1/08-3/31/09 - Tax Collector		895.00	
Rebounds	Registration - 2008 Summer High School Basketball League - Recreation Dept.		600.00	
Richard Willgerodt	Repair Converter for Dispatch Console - Police Dept.		396.00	
Rose Leonard	Watercolor Instruction - 6/12 & 6/19/2008 - Senior Affairs		140.00	
Sanitation Equipment Corp.	Misc. Parts - Sanitation #70 - DPW		1,307.24	
Scoles Floorshine Industries	Janitorial Supplies - DPW		2,033.92	
Seaboard Welding Supply	Welding Supplies & Industrial Gases - DPW		992.95	
Seaside Materials	Materials to Rebuild Shower Wall at Bath Avenue - DPW		12.58	
Signs By Tomorrow	Custom Lettering On Existing Banners - Administration		450.00	

* DENOTES PREPAY

** SUBJECT TO COMPLETION OF PAYMENT PACKAGE

Siperstein's	Paint & Misc. Materials - Traffic Dept. / Police Dept.		1,768.46
Skip's Sports	Uniforms for Public Facilities - DPW		32.00
Snap-On Equipment	Repair Misc. Tools - DPW		831.05
Stan Dziuba	Reimbursement for Expenses Incurred - Seminar at Javits Center - 6/17/08 - DPW		98.00
Stavola Asphalt	Road Materials to Repair Pot Holes - DPW		67.65
Storr Tractor Co.	Misc. Parts - PW #T-1 - DPW		292.44
Stumpy's	Spring Service on Waverunner - Recreation Dept.		319.74
Sunrise Suites Hotel	Temporary Housing - Delores Smith - 5/9-6/19/2008 - School Project - Community Dev.	*	1,785.00
Tape Stock Online	VCR Tapes - Police Dept.		715.84
Team Life	Misc. Safety Equipment - Fire Dept.		5,262.00
The Link News	Legal Ads / Calendar - May 2008 & (3) Full Page Ads - June 2008 - City Clerk / UEZ		1,315.00
The Peddler	(2) Bicycles & Misc. Equipment - Recreation Dept.		1,388.90
Thomson West	(5) NJ Criminal Justice & Motor Vehicle Law 2008 Pamphlets - Police Dept. / Municipal Court		392.50
Up-Tite Fasteners	Misc. Hardware for Beachfront - DPW		255.48
Verizon	Utilities - Telephone - 6/1 & 6/5/2008 - Various Locations	*	10,742.30
Verizon Wireless	Laptop Service - 6/12/2008 - Various Depts.	*	1,626.68
Verizon Wireless	Cell Phone Service - 6/16/2008 - Various Depts.	*	1,812.73
W H Potter & Son	Misc. Parts for Lawn Mower - DPW		262.23
W.B. Mason	Various Office Supplies - Various Depts.		1,503.73
Y-Pers	Rags for Municipal Garage - DPW		109.50
TOTAL CURRENT			**2,536,938.37**

Atlantic Plumbing Supply	(3) Outdoor Beach Showers - DPW		9,105.51
Builders' General Supply	Materials for Cottage Place - DPW		120.94
City of Long Branch Clearing Account	Reimburse Clearing Account	*	9,950.00
City of Long Branch Clearing Account	Reimburse Clearing Account	*	10,731.05
City of Long Branch Clearing Account	Reimburse Clearing Account	*	1,785.00
Clayton Block	Cement for Cottage Place Steps - DPW		134.31
Jads Construction	Retaining Wall for Ocean Blvd. / Franklin Ave. Intersection - Drainage Problem - DPW	*	9,950.00
Seaside Materials	Materials for Cottage Place - DPW		26.60
Sunrise Suites Hotel	Temporary Housing - Delores Smith - 5/9-6/19/2008 - School Project - Community Dev.	*	1,785.00
TOTAL CAPITAL			**43,588.41**

* DENOTES PREPAY

** SUBJECT TO COMPLETION OF PAYMENT PACKAGE

City of Long Branch Clearing Account	Reimburse Clearing Account	*	117.97	
City of Long Branch Clearing Account	Reimburse Clearing Account	*	5,403.77	
City of Long Branch Payroll Agency	Payroll Dated 6/27/2008	*	386.58	
City of Long Branch Payroll Agency	Payroll Dated 6/27/2008	*	5,017.19	
Geese Chasers	Geese Maintenance Control - Lake Area - June 2008		1,079.00	Pymt #1
General Service Admin./G.S.A. Fleet Mgmnt.	2001 Dodge Caravan for Animal Control - Health Dept.		4,200.00	
Long Branch Animal Hospital	Veterinary Services - May 2008		406.00	Pymt #5
Monmouth County SPCA	Animal Shelter Services - May 2008		1,745.00	Pymt #3
Verizon Wireless	Cell Phone Service - 6/16/2008 - Various Depts.	*	117.97	
TOTAL DOG			**18,473.48**	

Barbara Heggie	Choral Instruction - 5/15-6/17/2008 - Senior Affairs / Community Dev.		50.00
Bizzi Printing	T-shirts for Juneteenth Production - Community Dev.		795.00
Buhler Dodge	Misc. Automotive Parts - CD Vehicle - Community Dev.		109.15
Bullet Lock & Safe	Misc. Keys/Locks - May 2008 - Community Dev.		10.50
City of Long Branch Clearing Account	Reimburse Clearing Account	*	1,400.00
City of Long Branch Clearing Account	Reimburse Clearing Account	*	22,102.72
City of Long Branch Clearing Account	Reimburse Clearing Account	*	5,322.77
City of Long Branch Payroll Agency	Payroll Dated 6/27/2008	*	376.28
City of Long Branch Payroll Agency	Payroll Dated 6/27/2008	*	4,946.49
Conte's Car Wash	Car Wash Contract - June 2008		77.10
Fisher's Repair	Misc. Gardening Items for Community Gardens - Community Dev.		353.00
Funny Factory	Entertainment for Fun Fest - 6/8/2008 - Recreation Dept.	*	1,400.00
John Guire Co.	Misc. Materials - Community Dev.		787.43
Lakewood Auto Supply	Credit from Invoice #218219 - Community Dev.		(34.00)
NAHRO	Annual Membership Renewal - 7/1/2008-6/30/2009 - Community Dev.		460.00
Oceanview Bakery	Refreshments for Community Gardens Workers - Community Dev.		50.00
Security Detection Inc.	Walkthrough Metal Detector for CDBG Crime Prevention		4,551.95
Total Media	Tapes for Videography Service - Community Dev.		180.00
TOTAL HUD			**42,938.39**

* DENOTES PREPAY

** SUBJECT TO COMPLETION OF PAYMENT PACKAGE

ing	Engineering Services Rendered - December 2007 / June 2008 - Planning / Zoning Board	*	26,804.00	
Patricia Crowe Lepore	Relocation/Moving Benefit - Beachfront North II - Community Dev.	*	4,440.00	
City of Long nch Clearing Account	Reimburse Clearing Account	*	5,050.00	
City of Long Branch Clearing Account	Reimburse Clearing Account	*	24,876.56	
City of Long Branch Clearing Account	Reimburse Clearing Account	*	99,446.52	
City of Long Branch Clearing Account	Reimburse Clearing Account	*	13,215.33	
City of Long Branch Payroll Agency	Payroll Dated 6/27/2008	*	316.15	
City of Long Branch Payroll Agency	Payroll Dated 6/27/2008	*	12,899.18	
Eddie Sunnerville	Moving Benefit - Broadway Arts Center - Community Dev.	*	225.00	
Funny Factory	Entertainment for Fun Fest - 6/8/2008 - Recreation Dept.	*	2,000.00	
Greenbaum, Rowe, Smith & Davis	Professional Services Rendered - Pier Village II - May 2008		97.50	Pymt #2
Henry Zwferino	Security Deposit - Mattie Rodgers - Broadway Arts Center - Community Dev.	*	2,325.00	
Mattie Rodgers	Moving Benefit - Broadway Arts Center - Community Dev.	*	500.00	
Michael A. Irene Jr.	Legal Services Rendered - June 2008 - Zoning Board	*	250.00	
W.B. Mason	Various Office Supplies - UEZ		465.30	
Walter Zwirlz	RCA Housing Re-Hab - 260 Clifton Ave. - Community Dev.		250.00	
TOTAL TRUST OTHER			**193,160.54**	

* DENOTES PREPAY

** SUBJECT TO COMPLETION OF PAYMENT PACKAGE

R# 229-08

RESOLUTION OF COUNCIL OF THE CITY OF LONG BRANCH APPOINTING JOHN E. BUTOW AS TAX ASSESSOR FOR THE CITY OF LONG BRANCH

WHEREAS, the Tax Assessor of the City of Long Branch William Fitzpatrick has terminated his employment as Tax Assessor for the City of Long Branch; and

WHEREAS, John E. Butow is a state certified residential real estate appraiser and certified tax assessor; and

WHEREAS, John E. Butow has served as Deputy Tax Assessor for the Township of Middletown, Senior Assistant Tax Assessor for the Township of Middletown and previously served as the Tax Assessor for the Borough of Point Pleasant; and

WHEREAS, John E. Butow is qualified to be the Tax Assessor the City of Long Branch; and

WHEREAS, the Mayor of the City of Long Branch and Business Administrator have recommended John E. Butow to replace William Fitzpatrick as the Tax Assessor of the City of Long Branch; and

WHEREAS, the salary of John E. Butow is to be $73,000.00 per annum; and

WHEREAS, John E. Butow as the Tax Assessor shall commence his employment with the City of Long Branch on July 1, 2008; and

WHEREAS, the term of employment for John E. Butow shall commence on July 1, 2008 until June 30, 2010 to fulfill the unexpired term of present Tax Assessor William Fitzpatrick; and continue thereon as the Tax Assessor for the City of Long Branch for the initial four year appointment of same, commencing on July 1, 2010 until June 30, 2014; and

NOW THEREFORE BE IT RESOLVED, by the Council of the City of Long Branch that John E. Butow be and the same hereby is employed as the Tax Assessor for the City of Long Branch at a salary of $73,000.00 per annum, beginning on July 1, 2008 and ending on June 30, 2014.

MOVED:
SECONDED:

AYES:
NAYES:
ABSENT:
ABSTAIN: